| | | | | | |
|---|---|---|---|---|---|
| **Project** | | **Catalog #** | | **Type** | |
| **Prepared by** | | **Notes** | | **Date** | |

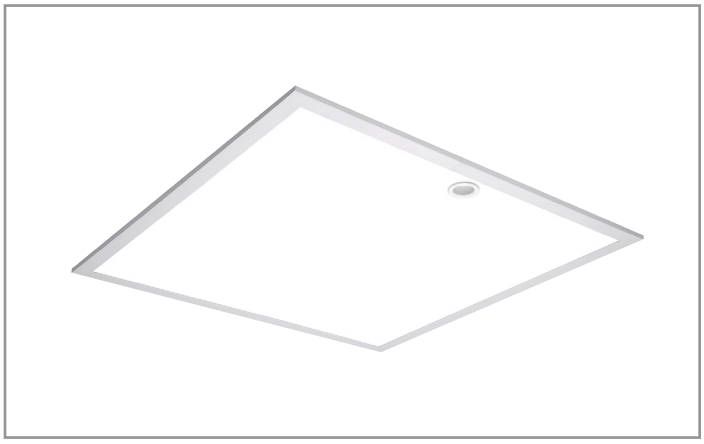

# Metalux

## 22FPX LED Panel

2' x 2' Configurable LED Edge Lit Panel Recessed in Insulated Ceilings or Suspended/Surface Mount

### Typical Applications

• Commercial Office Spaces • Schools • Healthcare
• Retail Merchandising Areas

### Interactive Menu


- Order Information page 2
- Photometric Data page 4
- Control Solutions page 5
- Product Warranty


### Product Certification

### Product Features

### Top Product Features

- Variety of controls and emergency battery pack options in all sizes
- Low profile perfect for renovation or new construction
- Contractor friendly, quick and easy install
- Available in 3000K, 3500K, 4000K, and 5000K CCT
- Standard and high efficacy options available
- Options to meet Trade Agreements Act requirements

### Dimensional and Mounting Details

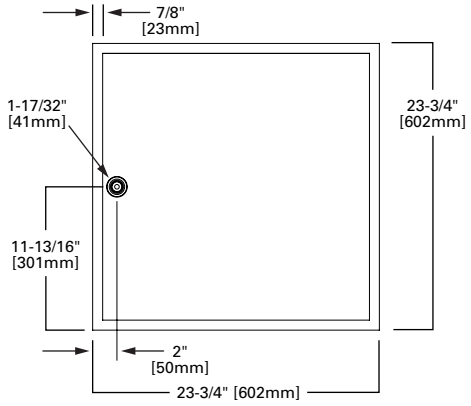


**Shown with either Sensor OR Integrated Emergency test switch.
For units with both Emergency and Sensor there is one holder on each end.**

additional product diagrams

## Order Information

SAMPLE ORDER NUMBER: **22FPX-32-L840-WLS**

| Domestic Preferences (1) | Rating | Width/Length | Series | LED Lumen Output (3) | Voltage (5) | Fuse Options (7) | Emergency | CCT |
|---|---|---|---|---|---|---|---|---|
| **[Blank]**=Standard<br>**TAA**=Trade Agreements Act | **[Blank]**=Standard<br>**ATW-SW4**=Chicago Rated (2) | **22**=2' x 2' | **FPX**=Configurable Flat Panel | **21**=2100<br>**25**=2500 (4)<br>**32**=3200<br>**42**=4200 | **[Blank]**=Universal Voltage<br>**347V**=347 Volt (6) | **[Blank]**=None<br>**GL**=Single Element Fuse<br>**GM**=Double Element Fuse | **[Blank]**=None<br>**EL7W**=7-watt 120V-277V emergency battery pack (8)<br>**EL10W**=10-watt 120V-277V emergency battery pack (8)<br>**EL14W**=14-watt 120V-277V emergency battery pack (8)<br>**EL10WSD**=10W emergency battery pack with self-diagnostic installed (8), (11)<br>**ETRD**=Emergency Transfer Relay with dimming control (9), (10)<br>**WNPS**=WaveLinx wireless Normal Power Sensing (NPS) capable device (19) | **L830**=3000K (12)<br>**L835**=3500K<br>**L840**=4000K<br>**L850**=5000K |
| **Notes**<br>(1) Only product configurations with this designated prefix are built to be compliant with the Trade Agreements Act of 1979 (TAA). Please refer to DOMESTIC PREFERENCES website for more information. Components shipped separately may be separately analyzed under domestic preference requirements. Accessories sold separately will be separately analyzed under domestic preference requirements. Consult factory for further information. | **Notes**<br>(2) No sensor or installed FLEX options available with ATW-SW4 option. | | | **Notes**<br>(3) Lumens are approximate. Use IES files for actual performance. (4) 2500 lumens only available in HE. | **Notes**<br>(5) Products also available in non-US voltages and frequencies for international markets. (6) 347V with sensor and/or emergencies only available with HCD or SR. | **Notes**<br>(7) Not available with the CD driver option. | **Notes**<br>(8) Factory installed with integral test switch/indicator/laser test. For approximate delivered lumens multiply the lumens per watt of the desired fixture by the wattage of the emergency battery pack (100 lm/W x 7=700 lumens). IES-format photometry for luminaire under emergency operation available. Battery option increases total height by 1 inch. (9) Used to bypass local control during outage. Must be used in conjunction with UL 1008 device (provided by others). ETRD option only requires one relay when used on a dimming fixture. 347 not available. (10) These options are only available with HCD and CD drivers. (11) EL10WSD not available with 347V. (19) Must be ordered with WLS or WPS sensor. WNPS cannot be ordered with emergency or relay options such as ETRD, GTR2, ELxxx or GTDU. | **Notes**<br>(12) 3000K only available 21 and 32 lumen options. |

| Efficacy | Flex (14) | Driver Type (15) | Number of Drivers |
|---|---|---|---|
| **[Blank]**=Standard<br>**HE**=High (13) | **[Blank]**=None<br>**A3/8-4/18GDIM**=Flex pre-installed with 5 conductors including ground and dimming leads<br>**A3/8-5/18GDIM**=Flex with 0-10V Dimming leads and Blue for alternate wiring. See below for details. | **[Blank]**=CD<br>**HCD**=0-10V Driver (1%-100% Dimming)<br>**5LTD**=DALI Driver (5%-100% Dimming)<br>**5LTHD**=DALI Driver (1%-100% Dimming)<br>**SD**=Step Dimming Driver (50% or 100% Dimming)<br>**LH**=Lutron HiLume (LDE1 series) 1%-100% EcoSystem Driver with Soft-on Fade to Black dimming (F)<br>**SR**=Sensor-ready Driver (1%-100% Dimming) | **[Blank]**=1 Driver |
| **Notes**<br>(13) 2500 lumens only available in HE. | **Notes**<br>(14) Multiple options available in online configurator. See additional notes on Flex below.<br>**Flexible Metal Conduit Options**<br>Flex options available for 0-10V dimming control, DALI dimming control, emergency and night light functions. 72-inch factory-installed and pre-wired to driver, fitted to luminaire housing access plate with 90° enclosed FMC connector. Not all options may be combined and installation ratings vary by type.<br>A3/8-4/18GDIM series notes: Factory installed dimming option 3/8" flexible metal conduit with 2-#18 power and ground wires and 2-#18 UL-listed jacketed 0-10V +/- control wires. Meets UL 66, 83, 1479, 1569, 1581, 2556. NEC® 250.118, 300.22(C), 392, 396, 330, 501, 502, 503, 530, 504, 505, 518, 520, 530, 645, 72; Federal Specification A-A-59544 (formerly J-C-30B); all applicable OSHA and HUD Requirements. UL Classified 1-, 2-, and 3-hour through penetration with applicable fire stop product (not included). May be surface mounted, fished and/or embedded in plaster. Cable tray and approved raceway rated, install per NEC®; Environmental Air-Handling Space Installation per NEC® 300.22(C). | **Notes**<br>(15) Products also available in non-US voltages and frequencies for international markets.<br>Integrated options must be used in conjunction with the associated system and may not be compatible with other options or accessories. Please refer to the following: (F) Consult Marketplace Options - Lutron system pages for additional details and compatibility. Compatible only with driver series shown, and may require two or more drivers. Requires field commissioning to operate or dim. Contact Lutron at www.lutron.com | |

| Integrated Sensing Systems | Options | Packaging |
|---|---|---|
| **[Blank]**=No Sensor<br>**WLS (formerly WAB)**=WaveLinx LITE Wireless Sensor, Occupancy w/ photocell, Independent & Networked (16), (B)<br>**WPS (formerly WAA)**=WaveLinx PRO Wireless Sensor, Occupancy w/ photocell, Networked (17), (A)<br>**WLN**=WaveLinx LITE Wireless Control Node, without sensor (16), (B)<br>**WPN**=WaveLinx PRO Wireless Control Node, without sensor (17), (A) | **[Blank]**=None<br>**SUS**=Suspension Mount (18) | **[Blank]**=Unit Pack<br>**PAL**=Job Pack, out of carton |
| **Notes**<br>(17) WPS sensor and WPN node to be used with CD or HCD driver. (16) WLS sensor and WLN node to be used with CD or HCD driver.<br>Integrated options must be used in conjunction with the associated system and may not be compatible with other options or accessories. Please refer to the following: (A) Consult WaveLinx PRO system pages for additional details and compatibility. (B) Consult WaveLinx LITE system pages for additional details and compatibility. | **Notes**<br>(18) Option is not required for suspension of the 2x2 but is recommended. | |

### Accessories/Ordering Information [20]

**Surface Mount Kit –** Surface box with sufficient clearance for all options

| Catalog No. | UPC | Kit Height |
|---|---|---|
| CGTSURF22 [1] | 080083083121 | 3-7/8" |
| SMK-22-W | 080083295227 | 4" |

**Note**: (1) Can be used with EL, ETRD, MWS, or 347V driver options.

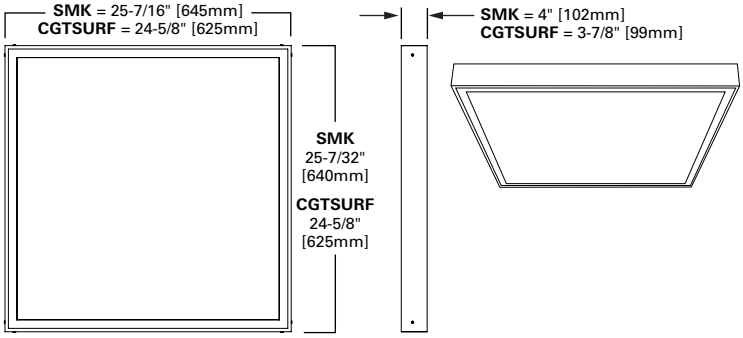


### Ceiling Retention

| Catalog | UPC |
|---|---|
| FPEQ | 080083802685 |

Required by some local codes
Order one set for each fixture
(Four clips per kit)

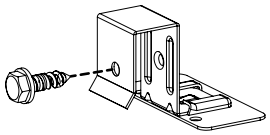

### Suspension Kit

| Catalog | UPC | Description |
|---|---|---|
| FPSUS24 | 080083258895 | 2 point Y-hanger suspension kit includes aircraft cable, carabiner, ceiling connection, SO cord, cord connectors and round 4" J-box cover plate |

Mounting height from ceiling
**Min.**=7-1/4" [184mm]
**Max**.=27" [286mm]

### Load Data (CD most common driver)

| | |
|---|---|
| Thd | 14% |
| Power Factor | 0.96 |
| Weight | 9.4 lbs. |
| Low Temp. Start | -20°C |

### Shipping Data

| Size | Wt. | Pallet (30" x 56") |
|---|---|---|
| 2' x 2' | 12 lbs. | 18 |

### Drywall Frame Kit

| Catalog | UPC |
|---|---|
| DF-22W-U | 662401232963 |

**Notes:** (20) Accessories sold separately will be separately analyzed under domestic preference requirements. Consult factory for further information.

## Product Specifications

### Construction
- Narrow aluminum bezel is tightly held to a die-formed code gauge steel back plate with flush perimeter and internal gasket
- Seamless corners to maximize the light emitting surface with a refined finish

### Mounting
- Integral grid clips and separate suspension clips provided for installation flexibility when additional retention is required
- Junction box constructed of code gauge galvanized steel with an easy access hinged door
- Multiple trade size knockouts provided on the top and sides
- Stock luminaire is less than 2.5" for use in shallow plenum or low ceiling spaces
- Surface mounting kits available
- Suspension options available from factory
- Factory installed flexible cable with dimming leads options available

### Limited Warranty
- Five year limited warranty

### Integrated Controls
- Standard with 0-10V dimming driver (10% standard, 1% optional)
- Integrated WaveLinx options provide wireless individual fixture control and enable code compliance, increased energy savings, grouping of fixtures, and connection to WaveLinx control systems
- DALI 2.0, Lutron, and step-dimming available

### Electrical
- Standard and High Efficacy models available
- LED's available in 3000K, 3500K, 4000K, and 5000K with a minimum of 80 CRI
- Color accuracy ≤3-Step MacAdam ellipse (SDCM)
- Projected lumen maintenance based on TM21 testing standards is L73 > 60,000 hours

### Optical Shielding
- Light guide with specialized features to optimize light extraction
- White frost lens with smooth pattern for uniform illumination
- Scratch and impact resistant

### Compliance
- Indoor luminaires are cULus listed for 25C ambient environments
- IC rated for direct insulation contact
- RoHS compliant
- Damp location listed
- IESNA LM-79 and LM-80 standards compliant
- Can be used for State of California Title 24 high efficacy luminaire
- Meets IP5X rating from the room side with no modification needed
- ATW-SW4 option is available for CCEA (Chicago Plenum) compliance
- Fixture is rated for NSF/ANSI standard 2 - Light fixture for Non-Food Zone

### Emergency Options
- 120V-277V integral emergency battery pack comes in 7-watts, 10-watt, or 14-watts
- Self-diagnostic emergency battery available in 10 or 14-watts (NFPA 101® Life Safety Code®)
- Constant power to the LED system for controlled, predictable discharge
- Integrated test switch/indicator light visible from floor
- Min. 90-minute backup period for code compliance
- Integral emergency transfer relay available for generator equipped power systems
- WNPS enables Normal Power Sensing (NPS) functionality, allowing detection of normal power availability as part of a WaveLinx EM solution
- NPS must be ordered with Wavelinx LITE or PRO sensor to enable wireless sensing EM solution
- Order standard product with compatible emergency control device (ESP-P) when pairing NPS enabled luminaires in any space
- NPS luminaires meet requirements

## Photometric Data

View IES files

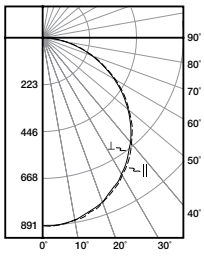


**22FPX-25-L840-HE-WPS**
Electronic Driver
Linear LED 4000K
Spacing criterion: (II) 1.25 x mounting height, (⊥) 1.24 x mounting height
Lumens: 2539
Input Watts: 19.8W
Efficacy: 128.2 LPW
Test Report: 22FPX-25-L840-HE-WPS.IES

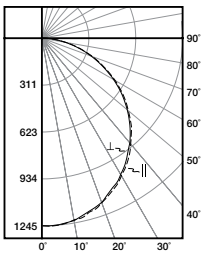


**22FPX-32-L840-WPS**
Electronic Driver
Linear LED 4000K
Spacing criterion: (II) 1.25 x mounting height, (⊥) 1.24 x mounting height
Lumens: 3543
Input Watts: 30.4W
Efficacy: 116.6 LPW
Test Report: 22FPX-32-L840-WPS.IES

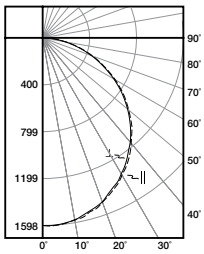


**22FPX-42-L840-WPS**
Electronic Driver
Linear LED 4000K
Spacing criterion: (II) 1.25 x mounting height, (⊥) 1.24 x mounting height
Lumens: 4545
Input Watts: 40.3W
Efficacy: 112.8 LPW
Test Report: 22FPX-42-L840-WPS.IES

## Energy and Performance Data by Catalog Number

| Catalog | Delivered Nominal Lumens | Watts | Efficacy (lm/W) | Input Current (A) | |
|---|---|---|---|---|---|
| | | | | 120V | 277V |
| 22FPX-21-L840-HCD | 2494 | 21.5 | 116.0 | .18 | .08 |
| 22FPX-25-L840-HE-HCD | 2551 | 20.5 | 124.6 | .17 | .07 |
| 22FPX-32-L840-HCD | 3560 | 31.2 | 114.1 | .26 | .11 |
| 22FPX-42-L840-HCD | 4567 | 41.5 | 110.1 | .35 | .15 |
| 22FPX-32-L840-WPS | 3543 | 30.4 | 116.2 | .25 | .11 |
| 22FPX-42-L840-WPS | 4545 | 40.3 | 112.8 | .34 | .15 |

**Lumen Calculator**

| CCT Multiplier | 80 CRI |
|---|---|
| 3000K | 0.94 |
| 3500K | 1.00 |
| 4000K | 1.00 |
| 5000K | 1.03 |

**Example of Lumen Adjustment Calculation**

22FPX-32-L830-HCD
at 3000K

Lumen Adjustment Factor = 0.94

Total Light Output =
3,560 lm x 0.94 = 3,360 lm

Efficacy = $\frac{3{,}360\ \text{lm}}{31.2\ \text{W}}$ = 107.7 lm/W

## Dimensional and Mounting Details

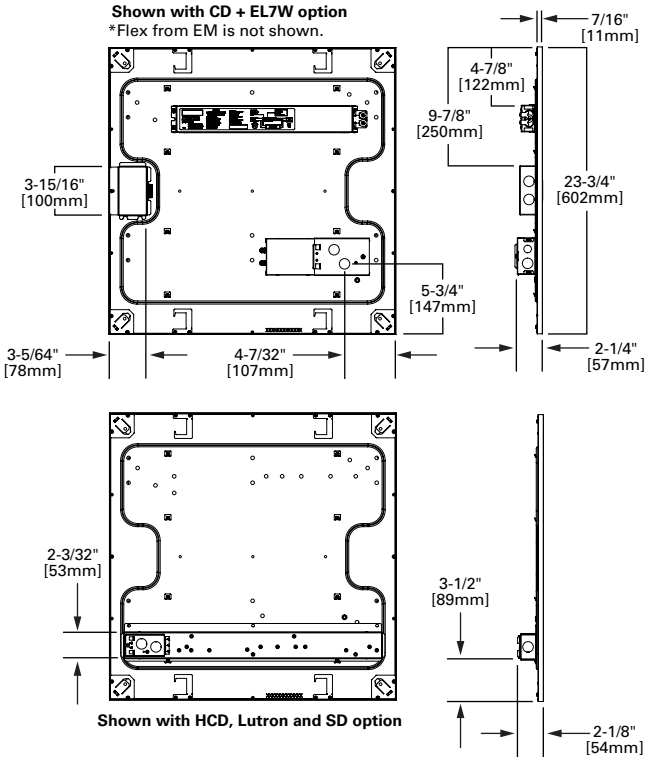

## Control Solutions

- WaveLinx LITE wireless
- WaveLinx PRO wireless
- WaveLinx CAT wired
- WaveLinx Wired

WaveLinx Digital Lighting Control Solutions

The FPX with WaveLinx offers no-hassle lighting control with multiple luminaire level control solutions.

**WaveLinx PRO** is a wireless lighting control solution, for connected spaces, that significantly reduces a building's energy consumption. From a single floor to an entire campus, WaveLinx PRO connects more than lighting assets; it shares aggregated sensor data with the WaveLinx CORE platform and other building systems, so building owners can improve operations, spaces environment, and tenants' experience. WaveLinx PRO offers a rich portfolio of wireless devices, WaveLinx PRO-enabled luminaires, and an intuitive WaveLinx mobile app for office, education, warehouse, and parking garage applications.

**WaveLinx LITE** is a cost effective, wireless digital lighting control solution, with out-of-the-box functionality, that saves energy and meets code. It's designed for applications that require occupancy-based, daylighting, or manual light control. Customize installations for office, education, warehouse and parking garages using the secure, simple mobile app.

**Integrated Sensor Coverage Pattern**

**TOP VIEW:**

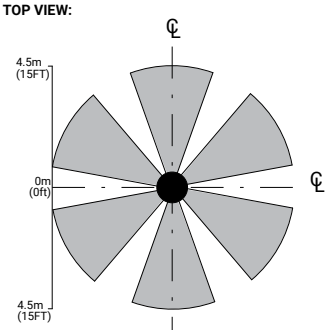


**SIDE VIEW:**

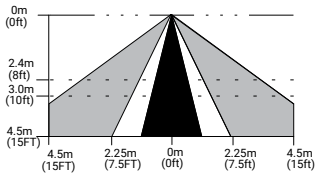


***Note**: Installation of integrated sensors within 3-ft (1m) of HVAC air vents is not recommended. The pattern shown is intended solely as a general guide and is not to scale.*

**With Integrated WaveLinx Sensor**

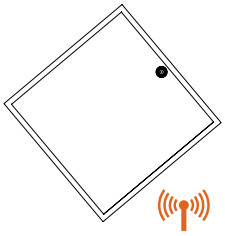

**With Integrated WaveLinx Node**

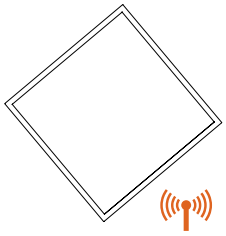

**Add a hidden WaveLinx sensor node (WPN, WLN) to your space lighting design!**

**Allows to:**

- Keeps luminaire aesthetics
- Connect fixtures without the realestate to include sensor option such as downlights
- Connect sealed fixtures without a standard sensor option such as products for clinical space.

**Integrated Controls Options**

| Option | Out of the Box Functionality | Luminaire Level Lighting Control (LLLC) | Automatic Dimming Photocell | Occupancy Sensing | CCT Control* |
|---|---|---|---|---|---|
| WLS | X | X | X | X | |
| WLN | | X | | | |
| WPS | | X | X | X | X |
| WPN | | X | | | X |

**Note**: *WaveLinx utilizes scenes to allow users to change an area's fixtures Correlated Color Temperature (CCT) and intensity using a commissioned wireless wallstation scene controller. To enable CCT adjustments through WaveLinx, include WPS or WPN devices in addition to VividTune or BioUp technologies for integrated fixture control. WPS with CCT controls the intensity of the fixture; an additional, externally mounted control device is needed to control the CCT. See RSP-P-010-347

The WNPS option is available with WLS or WPS sensors. Must be specified when ordered. Also note that WLS and WPS are also compatible with ESP-L-010-347 and ESP-P-010-347, respectively. Learn more about WaveLinx EM here.

## Systems comparison chart

Cooper Lighting Solutions provides many lighting system solutions designed to satisfy code requirements and meet the unique needs of any project.



**Luminaire with standalone sensor**



**Standalone Spaces** WaveLinx LITE



**Standalone Spaces** WaveLinx CAT



**Networked Spaces** WaveLinx PRO



**Enterprise** WaveLinx CORE

| | Luminaire with standalone sensor | Standalone Spaces WaveLinx LITE | Standalone Spaces WaveLinx CAT | Networked Spaces WaveLinx PRO | Enterprise WaveLinx CORE |
|---|---|---|---|---|---|
| **Occupancy** | Yes | Yes | Yes | Yes | Yes |
| **Daylighting** | Yes | Yes | Yes | Yes | Yes |
| **Wallstations** | – | Yes | Yes | Yes | Yes |
| **Gateways** | – | – | – | 1 WAC | 300 WACs |
| **Devices (MAX)** | – | 40 per Area (1120 per space) | 40 per Area | 200 per WAC2 | 32,500 per CORE Enterprise |
| **Software** | – | WaveLinx LITE Mobile App | WaveLinx CAT Mobile App | WaveLinx Mobile App | CORE |
| **Areas** | – | 28 per Space | Unlimited | 50 per WAC2 | up to 3,000 |
| **Zones** | – | 16 per Area | 16 per Area | 16 per Area | up to 9,000 |
| **Scheduling** | – | – | – | Local | Global |
| **VividTune™** | – | – | – | Yes | Yes |
| **Plug-Load Control** | – | Yes | Yes | Yes | Yes |
| **Low-Voltage Power** | – | – | Yes | Yes | Yes |
| **Integration** | – | – | – | – | BACnet, API |
| **Dashboards** | – | – | – | – | Energy, Occupancy |
| **Configuration** | – | Installer | Installer | Technician | Technician / IT |



**Cooper Lighting Solutions**
1121 Highway 74 South
Peachtree City, GA 30269
P: 770-486-4800
www.cooperlighting.com

© 2026 Cooper Lighting Solutions
All Rights Reserved.

Specifications and dimensions subject to change without notice.