Project		Catalog #		Type	
Prepared by		Notes		Date	

HALO HOME™

In-Wall Accessory Switch

In-wall wireless Bluetooth ON/OFF remote controller for any HALO Home Device

Typical Applications

Residential

Interactive Menu

- Order Information page 2
- Product Warranty page 2
- Wiring Diagrams page 3

Product Certification

Product Features

Top Product Features

- Wireless Bluetooth remote control with hardwired power
- Sends ON/OFF Bluetooth commands to any HALO Home Smart Light, Smart Dimmer/Plug/Switch
- Commission to command a single-pole In-Wall Smart Switch and create wireless Bluetooth 3-way/multi-way control
- Indoor use only

Dimensional and Mounting Details

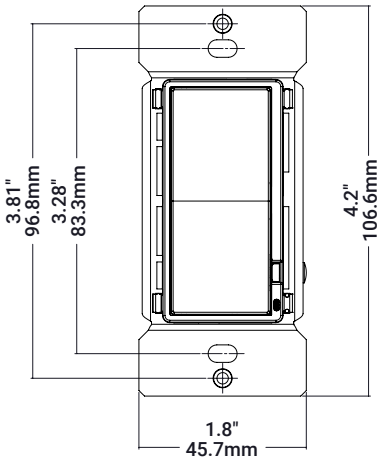

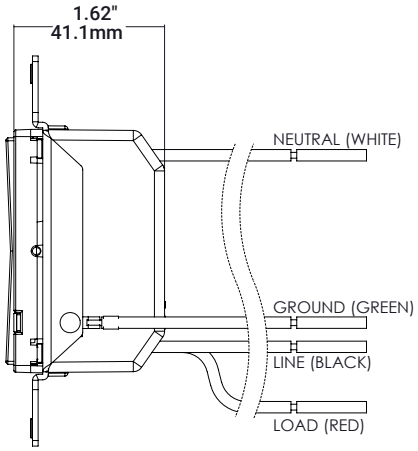

Order Information

ORDER NUMBER: **HIWACS1BLE40AWH**

Device	Generation	Protocol	Finish

Device	Generation	Protocol	Finish
HIWACS = HALO Home In-Wall Accessory Switch	**1** = 1st Generation	**BLE40A** = Bluetooth Mesh wireless control, 4.0	**WH** = Matte white

Product Specifications

Wireless System
- For use with the HALO Home mobile app
- Bluetooth low energy (BLE) mesh allows on/off, white tuning and dimming to be controlled wirelessly with companion wall stations, smartphones and tablets using HALO Home mobile application
- Setup Groups, Scenes and Schedules to automate lighting with the HALO Home mobile app

Bluetooth Mesh
- HALO Home products work better together. Expand and strengthen the Bluetooth network range by adding HALO Home devices
- Commissioning and Set up: Smartphone(s) will need to be within range (~35 ft line-of-sight) of a HALO Home product to commission and set up.
- Control: Smartphone(s) will need to be within range (~35 ft line-of-sight) of any HALO Home product to control anything within the mesh. (add remote access to a HALO Home installation by installing the optional Bridge)
- Device-to-device communication is ~100 ft line-of-sight
- Remote access to HALO Home lighting is available with the optional Smart Bridge
- Max Devices/Account: 200
- Learn more at **BringHaloHome.com**

Wireless Pairing
- See our online HALO Home Quick Start Guides for commissioning, setup, how-tos, and troubleshooting – including our Installation Guide go to support. **BringHaloHome.com**

Features
- Wireless Bluetooth remote control with hardwired power
- Sends ON/OFF Bluetooth commands to any HALO Home Smart Light, Smart Dimmer/Plug/Switch
- Commission to command a single-pole In-Wall Smart Switch and create wireless Bluetooth 3-way/ multi-way control

Environmental
- Rated for Indoor Use only
- -22°F to 104°F (-30°C to 40°C) damp locations

Design Features
- Fits decora sized wall plates (sold separately)
- Four (4) - 6" pre-stripped wires
  - Line (black)
  - Constant Hot (red)
  - Neutral (white)
  - Ground (green)
- Large paddle switch function
  - Press Up - Sends wireless message to any Device or Group associated with this Remote Controller to Turn ON
  - Press Down - Sends wireless message to any Device or Group associated with this Remote Controller to Turn OFF
- On status LED under firmware control

Air-gap Switch
- Pull out plastic air-gap switch to disconnect power to the constant hot (red wire) forcing an OFF condition to safely work on connected devices. This will also disconnect power to the switch itself.

Single-Pole & Multi-Way
This Accessory Switch is a wireless remote control with hardwired power.
- For single-pole control of fans/lights use a Smart Switch (HIWMS1BLE40AWH)
- For multi-location control of fans/non-dimmable lights use these Accessory Switches and program to wirelessly command the Smart Switch.
- Can also be programmed to turn HALO Home Smart Lights ON/OFF if dimming is not needed
- Neutral wire required

Maximum Load Rating
- Provides constant power to up to 600W of HALO Home LEDs
- Pass Thru Load: 720W Incandescent, 600W LED/ CFL/FL/ELV, 600VA MLV, 1/2 HP Fan Motor (When used with Smart Switch/Dimmer in 3-way and multi-way installations)

Factory Reset

ONLY DO THIS STEP IF YOU ARE UNABLE TO REMOVE THE DEVICE FROM THE APP. If removal isn't possible, delete it by clicking "my device is broken" and then do the factory reset step:
- Hold the ON button for 12 seconds to reset and claim to your account
- The LED indicator will blink continuously after a successful reset.

Certifications & Compliance
- cULus Listed. Complies with FCC Part 15, Class B
- Industry Canada RSS-Gen and RSS-247
- Bluetooth Certification 4.1 or higher + Mesh
- ROHS-2

Warranty
- Five-year limited warranty, visit website for details: **www.cooperlighting.com/legal**

Multi-Location Control Overview

Multiple Accessory Switches can control the same smart lights/devices for easy 3- or 4-way control.

MAX Load: 600W HALO Home Smart LED Lighting

**For control of non-smart loads, use the HALO Home Smart Dimmer or HALO Home Smart Switch.*

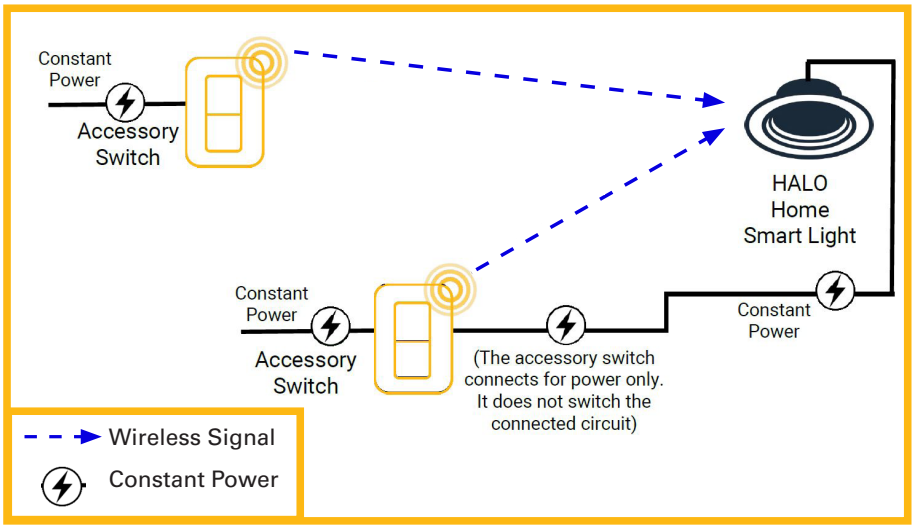

TIPS: When retrofitting existing switch locations:

- Verify that there is a neutral wire available at EACH switch location. (White wires connected to switch terminals and marked with electrical tape are typically NOT neutral wires.)
- HALO Home Accessory Switches cannot wire downline of a Smart Switch, Smart Dimmer, or other dimming/switching device. They require a constant hot feed (unswitched and undimmed).
- Because it does not directly control the Smart Light/Device, the HALO Home Accessory Switch does not need to be powered from the same circuit and can be connected for power to any convenient constant power circuit (undimmed and unswitched).

3-way and 4-way wiring can be confusing. If wiring does not match diagrams shown, stop and consult with an electrician.

3-Way Wiring Diagram

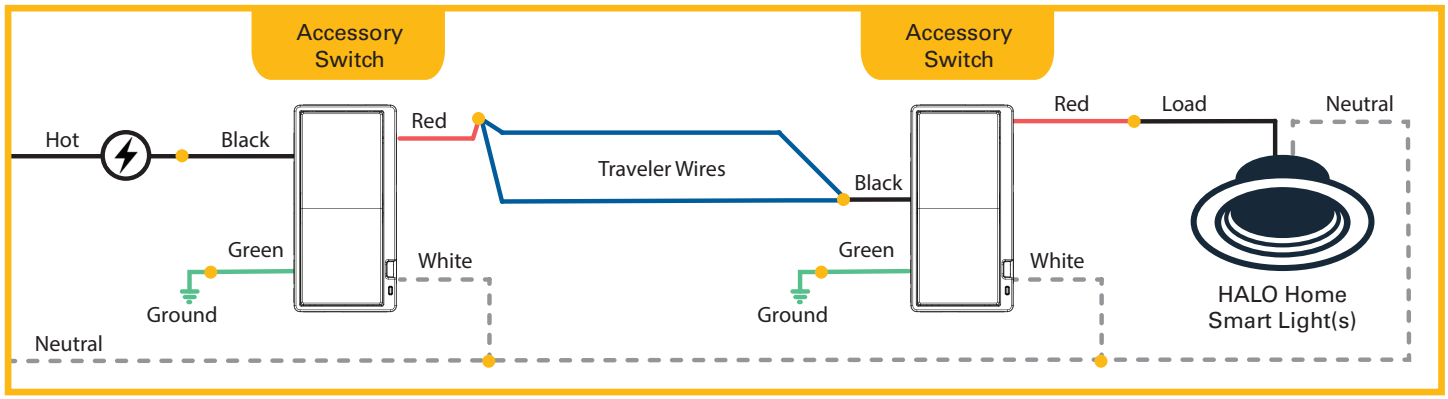

4-Way Wiring Diagram

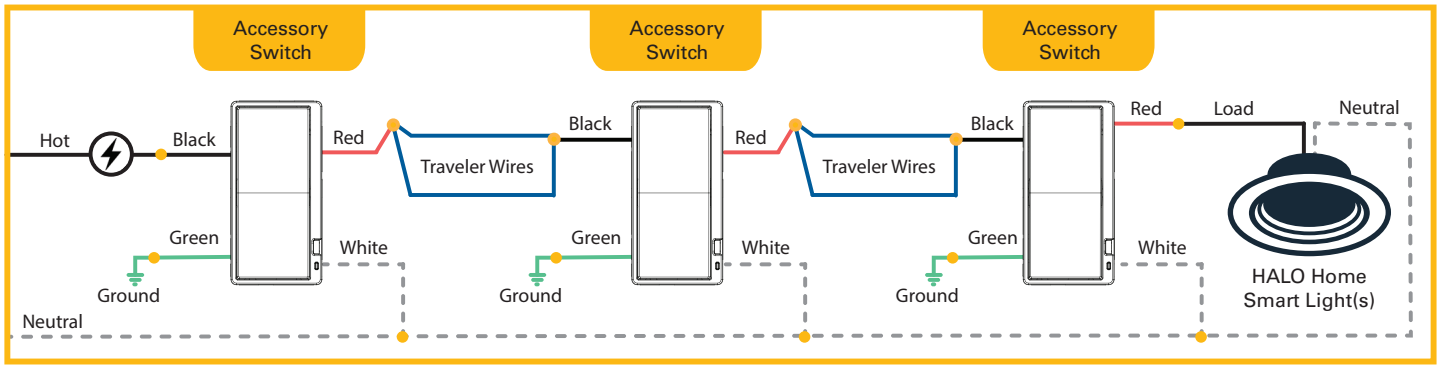

Cooper Lighting Solutions
1121 Highway 74 South
Peachtree City, GA 30269
P: 770-486-4800
www.cooperlighting.com

© 2021 Cooper Lighting Solutions
All Rights Reserved.

Specifications and dimensions subject to change without notice.