Design and Application Guide
volume 3



WaveLinx CAT

Wired Distributed Lighting Control Solution

Simple. Code-compliant. Scalable.







IECC 2021 • ASHRAE 90.1 2022 • Title 24 2022 Application Guides

COOPER Lighting Solutions
a signify business

WaveLinx CAT

cooperlighting.com



WaveLinx CAT

The most comprehensive wired, mobile app-based connected lighting control solution for indoor and outdoor commercial spaces.

Simple. Code-compliant. Scalable.

Table of Contents

Connected Lighting	3
Solutions overview	4-5
WaveLinx CAT features	6
System Architecture	7
WaveLinx Standalone solution	8-9
WaveLinx Network solution	10-11
WaveLinx Emergency solution	12
WaveLinx CAT System components	13-15
Mobile app	16
Switchpack	17
Emergency Switchpack	18
Occupancy and Daylight Sensor	19
Wallstations	20
Contact Closure Input Module	22
Sensor Interface Module	23
BLE Programming Interface	24
Network Device: Area Hub	25
ASHRAE 90.1 2022 application summary	28
IECC-2021 application summary	28
Title 24- 2022 application summary	29
Energy savings	29
Typical wiring diagrams	30
Switchpack	31
Emergency Switchpack	31
Contact Closure Input Module	32
Occupancy and Daylight Sensor	33
Sensor Interface Module	36
Network Device: Area Hub	37
Basic system design steps	38
Layout examples	
Classroom example	39
Conference room example	40
Corridor example	41
Private office example	42
Open office example	43
WaveLinx Networked Relay Panel	44
Cooper Lighting Solutions Service and Support	46-47

Connected Lighting

WaveLinx distributed lighting control solutions easily connect luminaires, sensors, and other control devices to create a digital controls network. WaveLinx products enable ease in specification, installation, and ownership. It's the go-to digital lighting controls platform for specifiers, contractors, and building owners.

WaveLinx solutions provide innovative networked controls that are simple and sophisticated, from easy, convenient plug-and-play lighting controls to scalable BACnet®/IP-protocol systems.

This application guide walks through:

- California's Title 24, Part 6 standards
- ASHRAE 90.1 standards
- IECC standards

WaveLinx Digital Lighting Control Solutions Overview

Meet your application requirements with WaveLinx CAT, LITE and PRO devices		**Wired** Solution for Standalone Spaces	**Wireless** Solution for Standalone Spaces	**Wireless** Solution for Network Spaces
EQUIPMENT	Switches	●	●	●
	Switchpacks	●	●	●
	Emergency Switchpacks	●		●
	PIR Ceiling Sensor	●	●	●
	Dual Tech Ceiling Sensor	●		●
	Daylight Sensor	●	●	●
	Sensor Integrated Fixtures		●	●
	Contact Closure Input	●		●
	Receptacle Control	●	●	●
INSTALLATION	Traditional Wiring	●	●	●
	Category Cable Wiring	●		●
	Battery-operated Devices	●	●	●
SOFTWARE	AV Integration			●
	BACnet®			●
	OpenADR			●
	Mobile App	●	●	●
	Floorplan			●
	Alarms and Events			●
	Energy Dashboard			●
	API Integration			●
APPLICATIONS	Office - Private / Open	●	●	●
	Education - Classroom	●	●	●
	Healthcare - Patient Rooms	●	●	●
	Retail Stores	●	●	●
	Industrial - Warehouse		●	●
	Outdoor Parking Lot		●	●
	Outdoor Area Site		●	●
	Outdoor Parking Garage		●	●
CODE	ASHRAE 90.1	●	●	●
	IECC	●	●	●
	T24	●	●	●

Wired and Wireless Solutions for Single Spaces

WaveLinx is designed to satisfy the requirements of single- and multiple-space projects.



Outdoor
PRO & LITE solutions

Open office
PRO & CAT Hybrid solutions

Conference room
CAT solution

Private office
LITE solution

WaveLinx CAT adds speed and simplicity

Our new CAT5-based control devices are the latest addition to our WaveLinx system. WaveLinx CAT5 features allow you to:

Meet your applications, both standalone and network - The devices can be used for a single zone room as well as a large campus that requires a networked control solution.

Leverage the power of the WaveLinx Area Controller and CORE to meet the latest energy codes and most complex specifications – The new CAT5-based control devices can communicate with the WAC and take advantage of the WAC and CORE. You can also program and manage PRO and CAT devices using the same WaveLinx apps.

Reduce commissioning time with the mobile-based app solution – The familiar and intuitive WaveLinx mobile app makes it easy to configure and manage the WaveLinx system with CAT control devices.

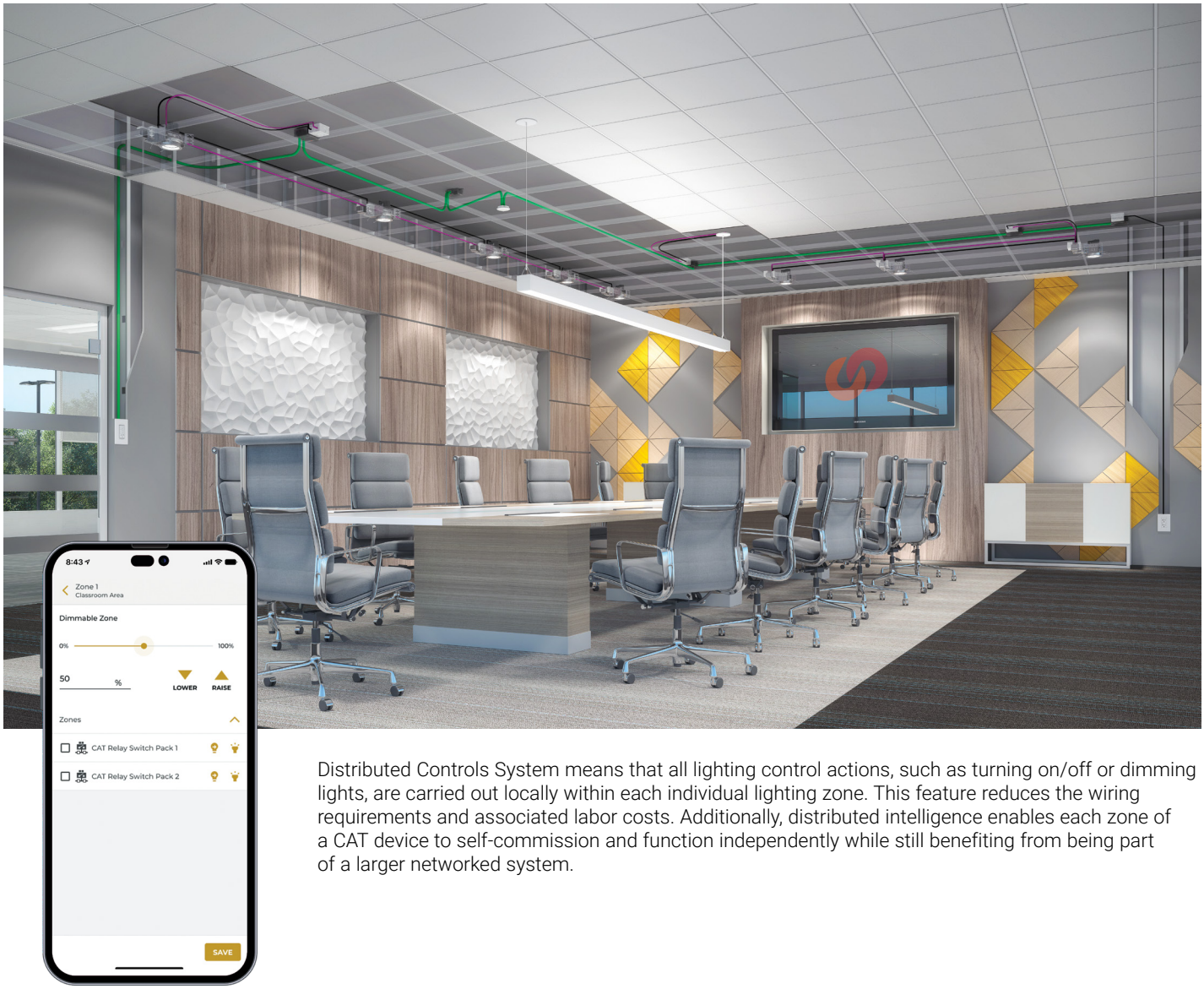

Distributed Controls System means that all lighting control actions, such as turning on/off or dimming lights, are carried out locally within each individual lighting zone. This feature reduces the wiring requirements and associated labor costs. Additionally, distributed intelligence enables each zone of a CAT device to self-commission and function independently while still benefiting from being part of a larger networked system.



System architecture

WaveLinx Standalone Room-based Solution

- Use up to 40 devices per standalone network in a daisy chain (no T-junction).
- Use up to 1000 ft of total CAT5 cable length.
- Terminate the local network at the first and last device.

Example:

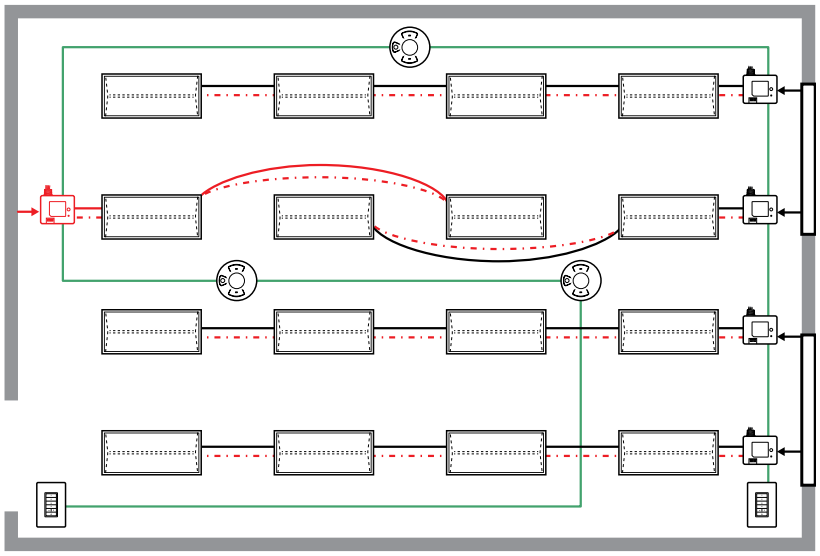

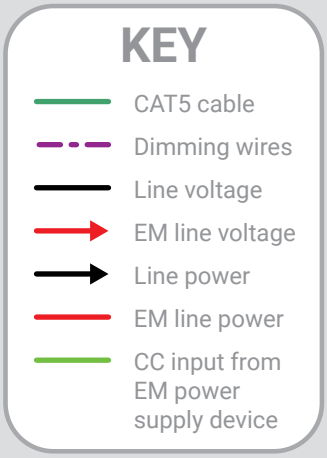

WaveLinx offers wired control devices that communicate with each other over a category cable using WaveLinx CAT, a proprietary digital communication.

WaveLinx reduces installation time with its simple click-and-go, auto-discovery, and self-commissioning features.

For a single room/space wired solution, simply connect the wired devices using category CAT5 cable. The devices automatically discover each other and self-commission.

WaveLinx CAT: Standalone Installation

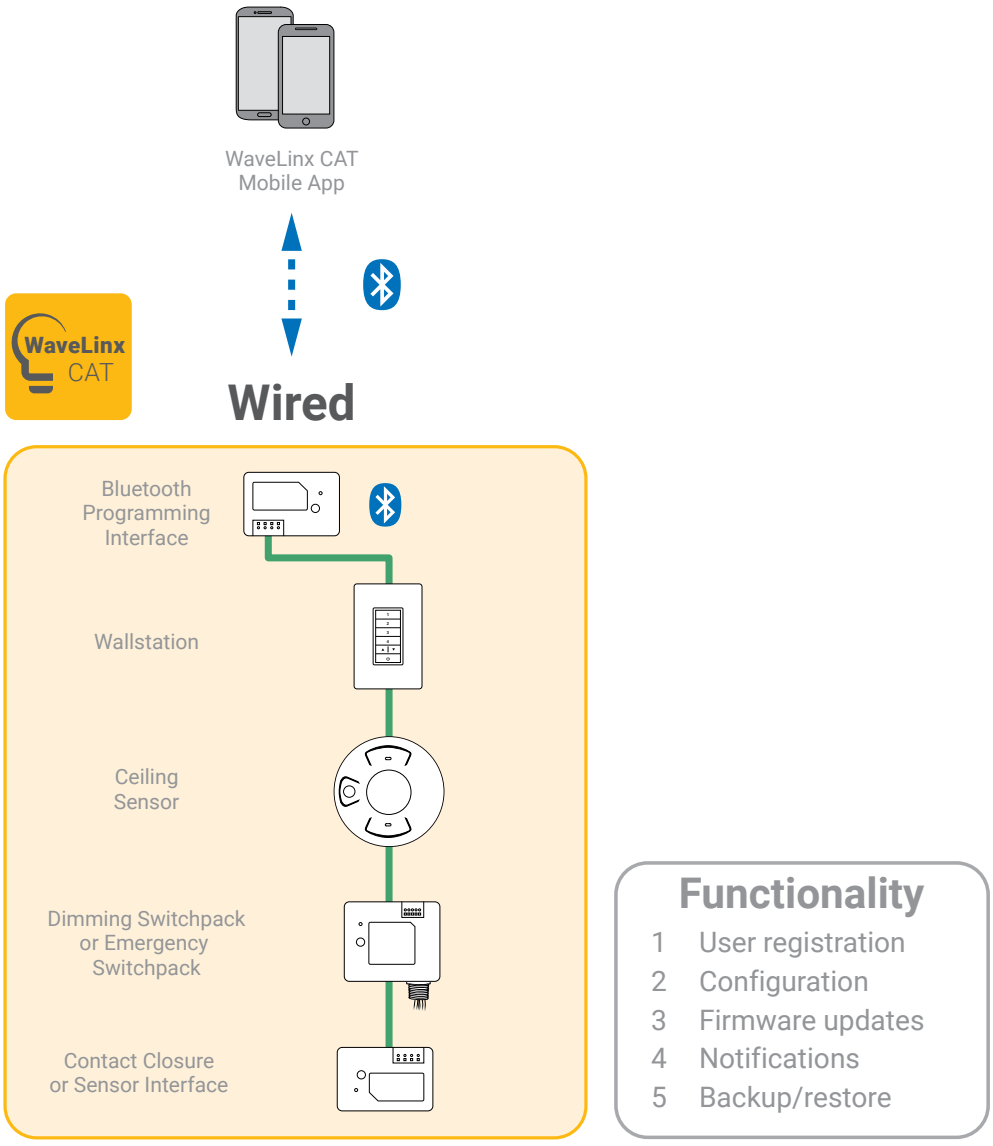

Functionality

1. User registration
2. Configuration
3. Firmware updates
4. Notifications
5. Backup/restore



Features

- Out-of-the-box code-compliant configuration for the devices
- No connection to building LAN required
- Powered via CAT network bus
- Controls up to 40 WaveLinx CAT devices, 1000 ft of total category cable length
- Drag-and-drop programming of lighting zones via WaveLinx CAT mobile app

WaveLinx CAT: Network Solution

- Up to 8 areas connected through Area Hub
- WaveLinx Area Controller connects multiple areas

Example:

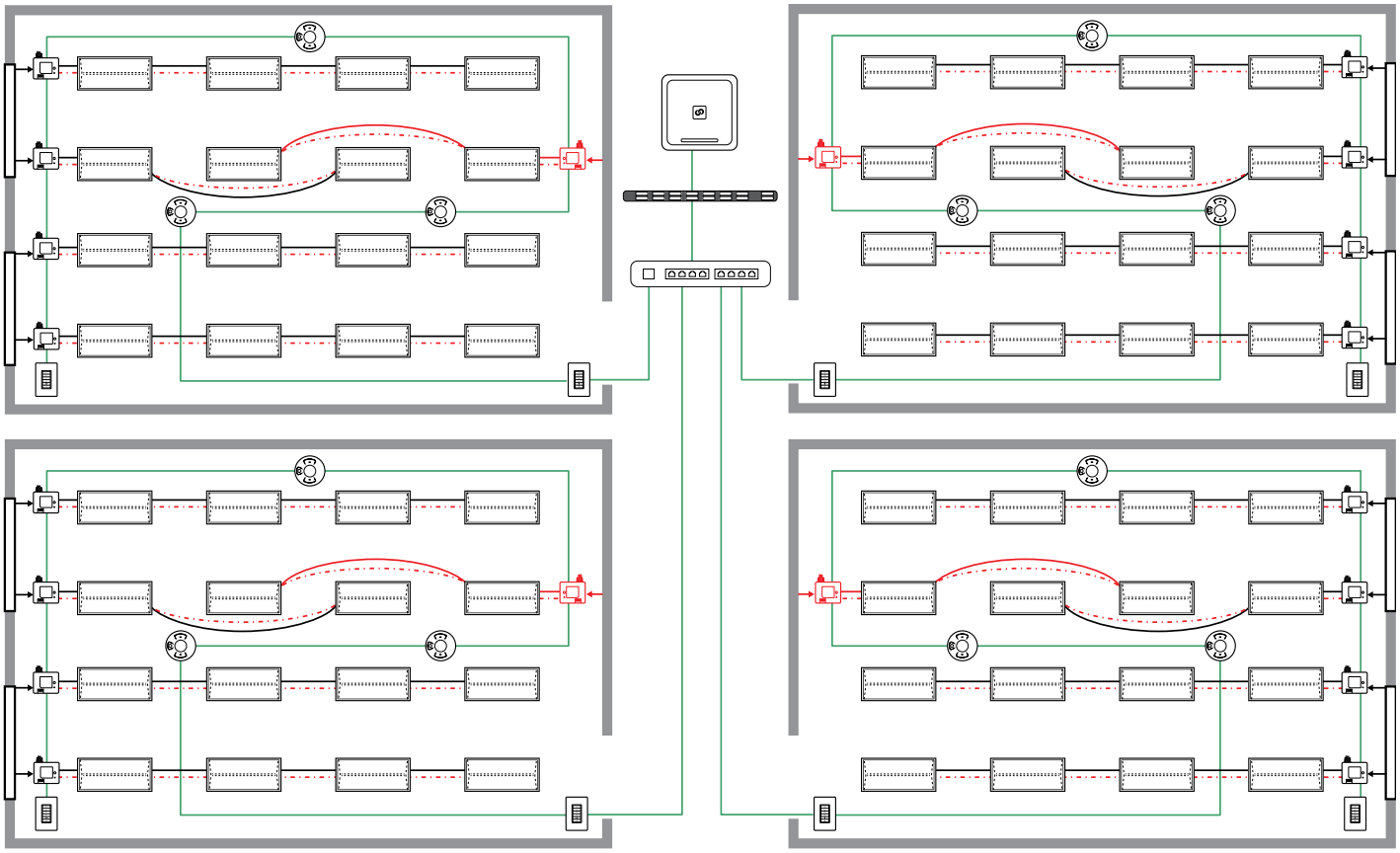

KEY

- CAT5 cable
- Dimming wires
- Line voltage
- EM line voltage
- Line power
- EM line power
- CC input from EM power supply device

For large spaces or spaces for which wired and wireless need to come together as a hybrid system, WaveLinx offers the WaveLinx Area Controller which communicates with both PRO and CAT devices.

WaveLinx Area Controllers communicate with wireless devices using PRO protocols over 802.15.4 radio and with wired devices via a WaveLinx Area Hub.

WaveLinx Area Controller allows you to scale to multiple rooms on an entire floor. WaveLinx CAT devices connect via CAT5 cable or WaveLinx PRO devices via 802.15.4 radio.

WaveLinx CAT: Network Installation

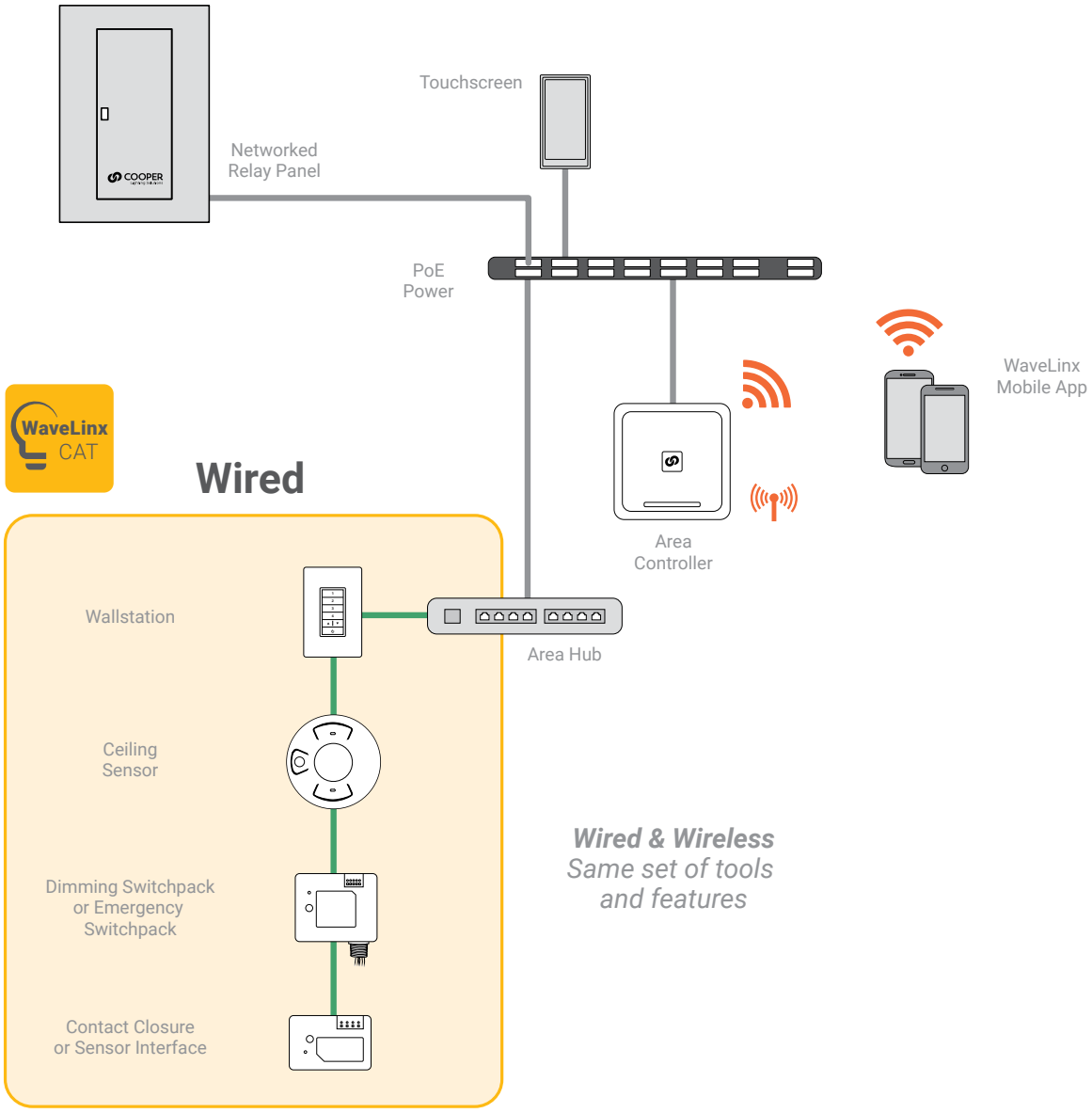



Features

- Easy upgrade to network spaces with CAT5 wired connection with the WaveLinx Area Controller
- A hybrid controls solution, with WaveLinx CAT and PRO devices working as one unified system
- Supports up to 8 CAT5 network areas per WaveLinx Area Hub and 150 devices per WaveLinx Area Controller
- One WaveLinx mobile app controls and configures WaveLinx CAT and PRO devices

WaveLinx CAT: Emergency Solution

- Automatic Override – Automatically overrides emergency lights on to full brightness upon normal power loss.
- UL924-Compliant – Meets UL924 emergency power supply and NEMA410 ratings for LED/electronic ballast inrush
- Digital communication over CAT - Enables remote configuration of the device settings such as zone assignment via WaveLinx apps (mobile or web-based apps)

Example:

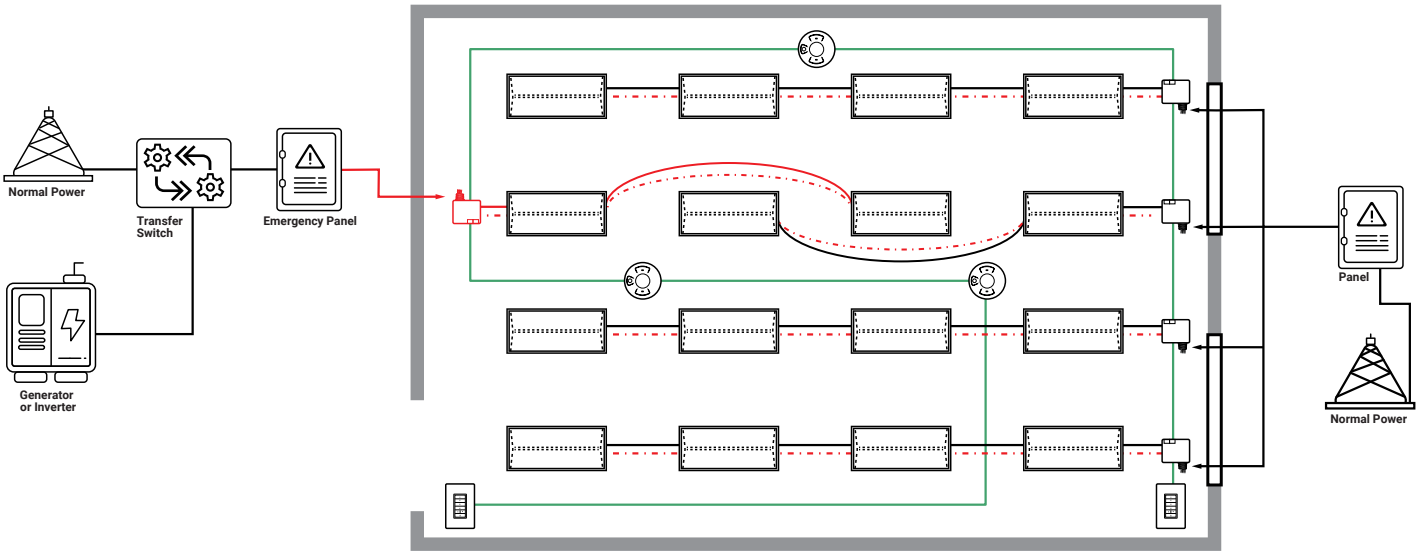



The WaveLinx CAT Emergency solution is provided through an emergency dimming switchpack (ESP-C). It offers 120/277VAC (Single Phase) 20A relay control and continuous 0-10V dimming control of LED and non-LED loads. The ESP-C Switchpack is ideally suited for use in conjunction with a standard RSP-C Relay Switchpack that controls a zone's normal powered lighting.



System components

WaveLinx CAT: System components

Distributed Wired Control System

WaveLinx CAT is the most comprehensive and cost effective distributed wired controls system on the market. It provides out-of-the-box functionality that facilitates basic occupancy code compliance while also providing an energy saving high end trim. A wired control system that is so simple that it can be setup without lighting controls knowledge is extremely rare. WaveLinx CAT is setup using a mobile application that connects with Bluetooth programming module in each room, WaveLinx CAT does the rest using automatic code commissioning.

WaveLinx CORE component

WaveLinx PRO component

WaveLinx CAT component

WAVELINX COMPONENTS		
	DESCRIPTION	CAT NUMBER
WaveLinx CORE Pro, Enterprise and Virtual CORE Enterprise Enterprise | BACnet | API Integration		TRX-TCPRO2 TRX-TCENT2 TRX-TCVRT2
WaveLinx CORE Enterprise | BACnet | API Integration		TRX-LGT250 TRX-API TRX-BACNET TRX-OPNADR
WaveLinx Mobile app Stand-alone | Network | Mobile Access	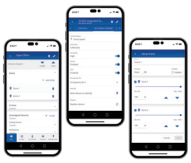	W-APP
WaveLinx Area Controller Stand-alone | Network | Mobile Access		WAC2-POE WAC2-120 WPOE2-120
WaveLinx CAT Mobile app Stand-alone | Mobile Access	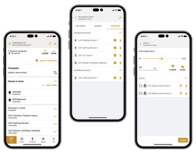	WaveLinx CAT

WAVELINX CAT COMPONENTS

	DESCRIPTION	CAT NUMBER
Area Hub Network Communication Interface		WAH-C-POE-ID
Switchpack Power Supply | 0-10V Dimming 20A Switching		RSP-C-010-Z1 RSP-C-010-Z2 RSP-C-010-Z3 RSP-C-010-Z4 RSP-C-ZR ESP-C-010-Z1 RSP-C-347-Z1 ESP-C-347-Z1
Occupancy Ceiling Sensor Occupancy and Vacancy Daylight | Dual Tech | PIR		OCS-C-P06 OCS-C-P12 OCS-C-D06 OCS-C-D12 OCS-C-D20
Sensor Interface Module Greengate Dual Tech Sensors Sensor Power Supply		SIM-C-V
Contact Closure Input Alarm | Demand Response Timeclock | Key switch		CCI-C-V
Wallstation CAT Bus Powered Multi-scene | Single Zone | Affected Zones Dimming Control | Toggle Features Configurable		WST-C-1-* WST-C-3-* WST-C-3D-* WST-C-5D-* WST-C-1-Z-* WST-C-1D-Z-* WST-C-3-Z-* WST-C-3D-Z-* WST-C-5D-Z-*
BT Programming Interface Standalone Solution | Mobile app Interface		BPI-C-L

WaveLinx CAT:

Mobile app

The WaveLinx CAT mobile app enables users to perform setup, configuration, and maintenance of the WaveLinx CAT system from a wireless smartphone or tablet.

Commissioning

- Create Areas
- Drag devices into Areas/Zones

Sequence of Operations

- Individual daylight zones to 500 lux
- Automatic OFF of lights and plug load
- Wallstation scene control
  - Dominant button is 50% light level
  - Other buttons are scenes
- Demand Response ready

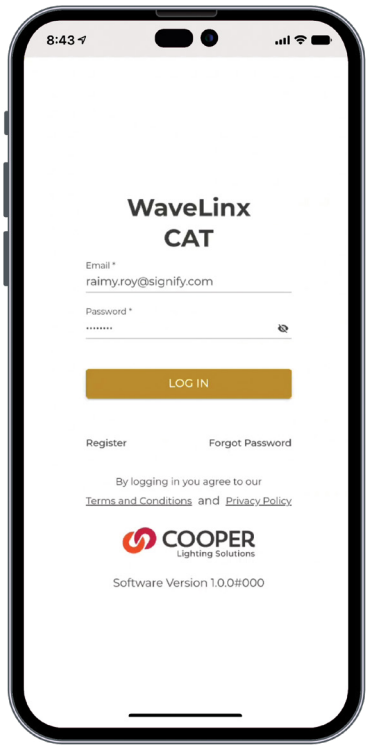

The WaveLinx CAT App can be downloaded via the Apple Store® or Google Play and is an accessory to the WaveLinx systems

Download on the App Store

GET IT ON Google Play

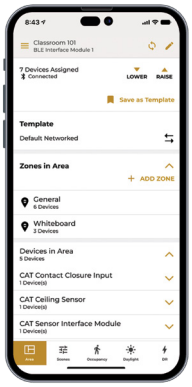

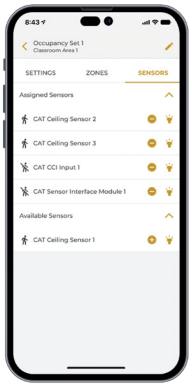

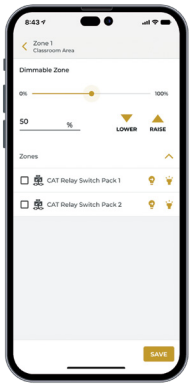

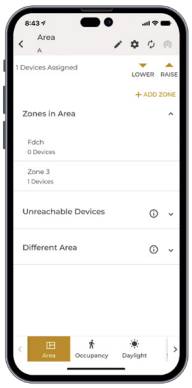

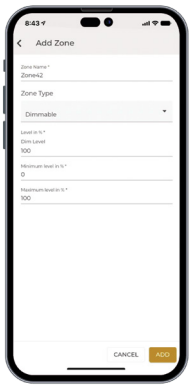

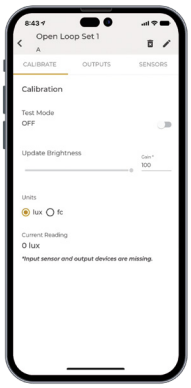

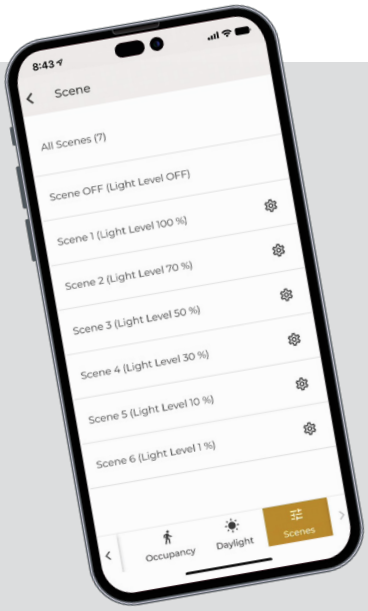

Manual Dimmer

Occupancy Sensor

Lumen Maintenance Control

Daylighting Control

Receptacle Control

Manually Switched ON/OFF

Task Tuning

Scheduling

Demand Response

WaveLinx CAT:

Switchpack

The CAT Dimming Switchpack (RSP-C-010-*) is used to switch (on/off) loads via an internal 20amp latching relay designed with robust protection. It also offers continuous 0-10V dimming control of LED and non LED loads. Finally, the CAT Dimming Switchpack provides power to the CAT bus by transforming Class 1 line voltage (120/277 VAC) to Class 2 low voltage (24 VDC).







Product Features and Benefits

- **20 Amps latching relay -** Allows to turn on/off LED and non LED loads
- **0-10V dimming with 30mA sink -** Allows to raise and dim fixtures powered with 0-10V drivers.
- 24VDC output power with 350mA - Powers the CAT bus and up to 40 CAT devices.
- **Digital communication over CAT -** Enables remote configuration of the device settings such as zone assignment via WaveLinx apps (mobile or web-based apps)

catalog number:

RSP-C-010-Z1	RSP-C Relay Switchpack - Zone 1
RSP-C-010-Z2	RSP-C Relay Switchpack - Zone 2
RSP-C-010-Z3	RSP-C Relay Switchpack - Zone 3
RSP-C-010-Z4	RSP-C Relay Switchpack - Zone 4
RSP-C-ZR	RSP-C Relay Switchpack - Zone Receptacle
RSP-C-347-Z1	RSP-C 347V Switchpack - Zone 1

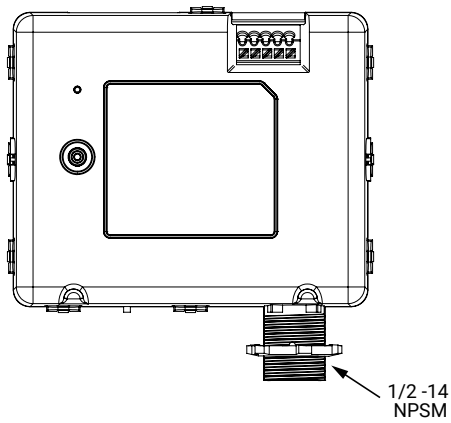

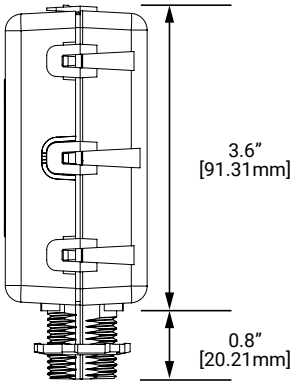

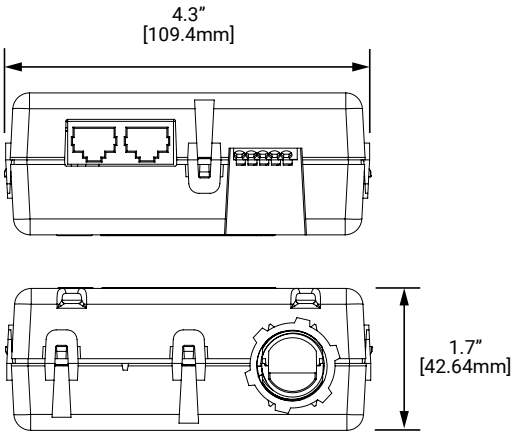

WaveLinx CAT:

Emergency Switchpack

The Emergency Relay Switchpack is an integral part of the WaveLinx connected lighting system that provides the CAT network system bus power - up to 350mA. It offers 120/277VAC (Single Phase) 20amp elay control and continuous 0-10V dimming control of LED and non-LED loads. The Emergency Relay Switchpack is used to control switch luminaires powered via an emergency circuit. The ESP-C Relay Switch Pack is ideally suited for use in conjunction with a standard RSP-C Relay Switch Pack that controls a zone's normal powered lighting.



catalog number:

ESP-C-010-Z1 ESP-C Emergency Relay Switchpack - Zone 1

ESP-C-010-Z1 ESP-C Emergency Relay Switchpack - Zone 1

ESP-C-347-Z1 ESP-C 347V Emergency Relay Switchpack - Zone 1

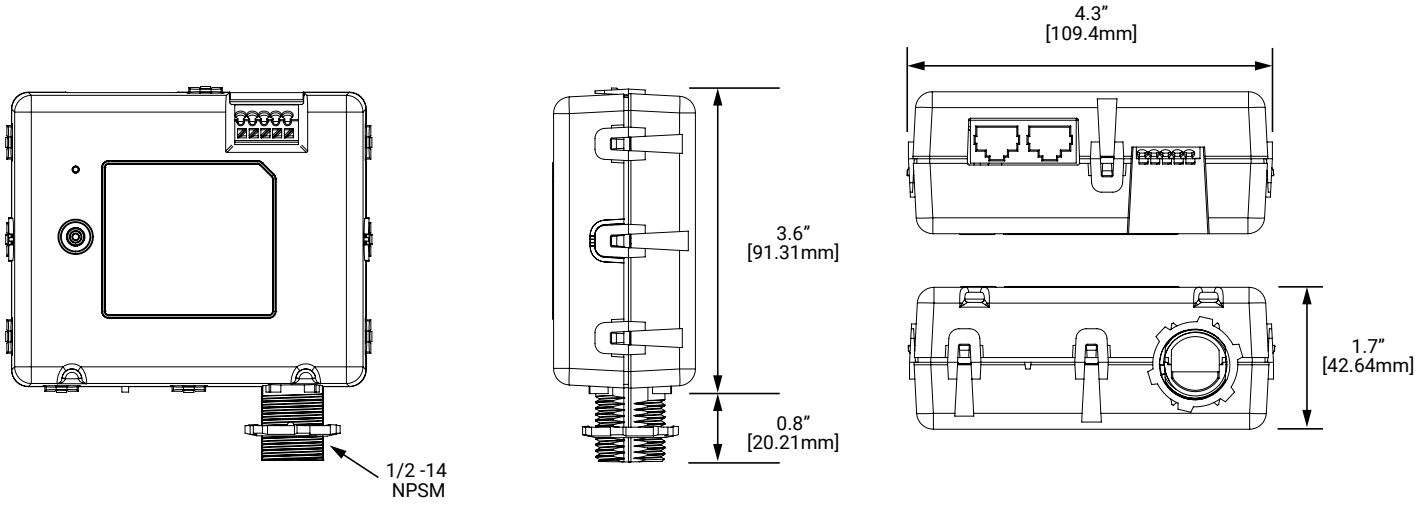

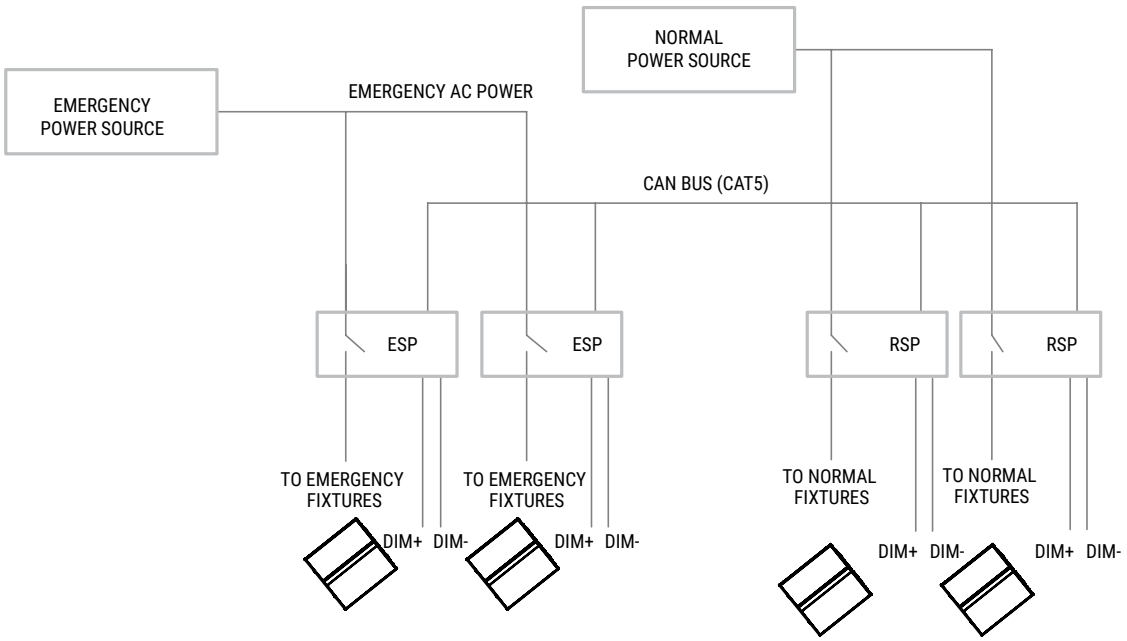

WaveLinx CAT:

Occupancy and Daylight Sensor

The WaveLinx CAT ceiling sensor is offered in two varieties - the passive infrared (PIR) and dual tech. The PIR technology detects the presence of people by sensing changes in heat, while dual tech combines PIR with acoustic feature that listens for sounds, such as talking or movement, to determine if an area is still occupied. The sensor also detects the daylight coming into the space from the windows to determine when the fixtures near the windows should be dimmed.

The sensor then transmits the appropriate commands to the associated dimming and switching devices via the CAT communication bus to turn the lights on or off automatically to meet and exceed the local energy code.



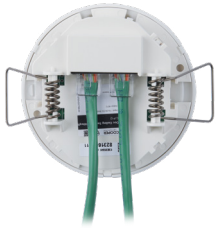





catalog number:

OCS-C-P06	WaveLinx CAT PIR Ceiling Sensor, 600 sqft
OCS-C-P12	WaveLinx CAT PIR Ceiling Sensor, 1200 sqft
OCS-C-D06	WaveLinx CAT Dual Tech Ceiling Sensor, 600 sqft
OCS-C-D12	WaveLinx CAT Dual Tech Ceiling Sensor, 1200 sqft
OCS-C-D20	WaveLinx CAT Dual Tech Ceiling Sensor, 2000 sqft

Sensor is designed to be installed into ceiling tile or onto a junction box.

Tilemount

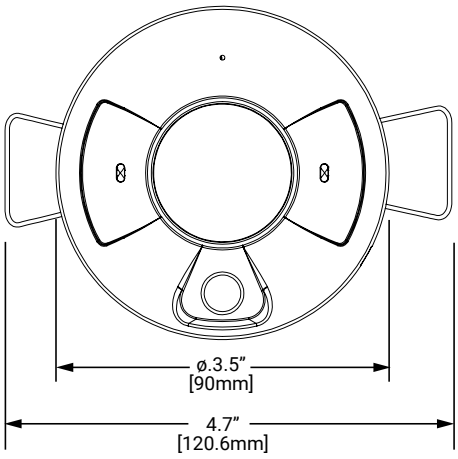

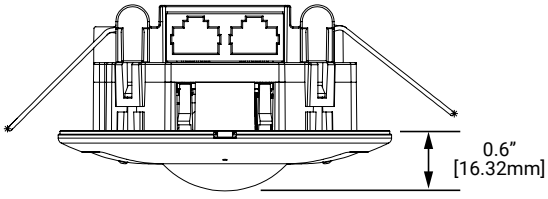

4" Octogon, 2 1/8" deep Junction Box with adapter plate and trim ring

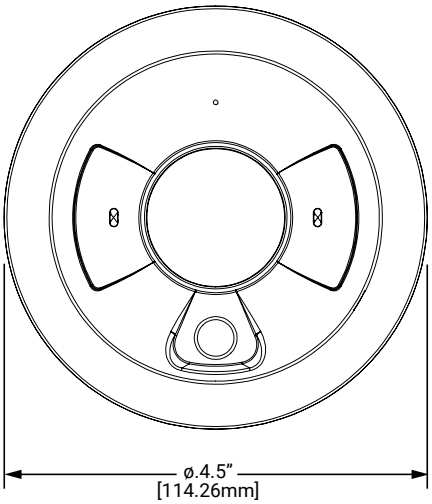

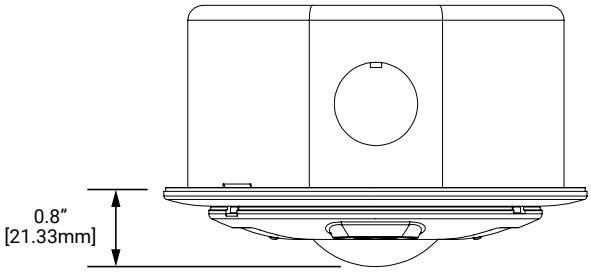

WaveLinx CAT:

Wallstations

The WaveLinx CAT WST Wallstation is a sleek commercial keypad with smooth tactile feedback that allows users to control lighting levels in a space managed by WaveLinx CAT switchpacks. The wall station is a single gang decorator keypad that enables toggle/raise/lower/scene and level control of lighting zones. The wallstation communicates with the other CAT devices via CAT5 cable through RJ45 connectors. The same CAT5 cable is used to power the wallstation. The wallstation is available in a variety of button configurations. Each button's action can be customized using the intuitive WaveLinx CAT mobile app.

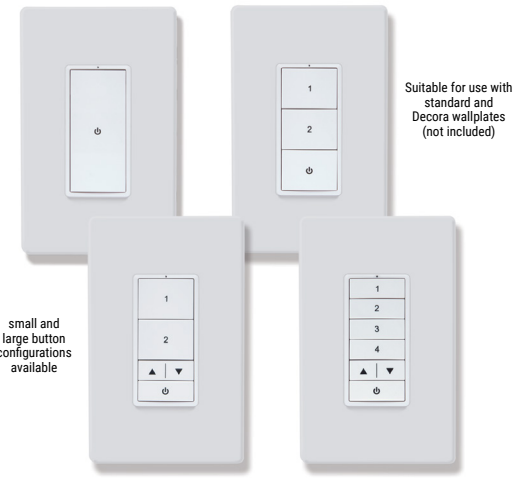





catalog number:

WST-C-1-*	WST-C Wallstation, 1 button, scene control
WST-C-3-*	WST-C Wallstation, 3 button, scene control
WST-C-3D-*	WST-C Wallstation, 3 button dimming, scene control
WST-C-5D-*	WST-C Wallstation, 5 button dimming, scene control
WST-C-1-Z-*	WST-C Wallstation, 1 button, zone control
WST-C-1D-Z-*	WST-C Wallstation, 1 button dimming, zone control
WST-C-3-Z-*	WST-C Wallstation, 3 button, zone control
WST-C-3D-Z-*	WST-C Wallstation, 3 button dimming, zone control
WST-C-5D-Z-*	WST-C Wallstation, 5 button dimming, zone control



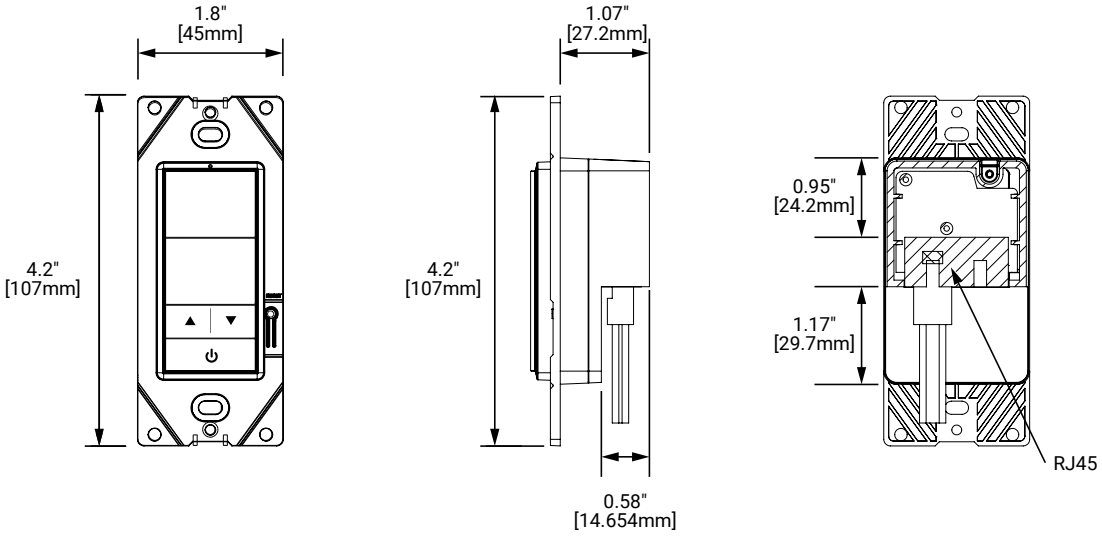

WaveLinx CAT:

Wallstation Configurations

Scene control

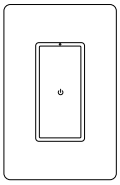

WST-C-1-*

Power	Toggle Scene (Scene 0/Scene 1)

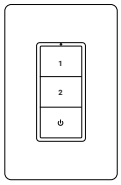

WST-C-3-*

Button 1	Scene 1 = 100%
Button 2	Scene 3 = 50%
Power	Scene 0 (OFF)

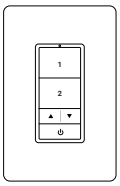

WST-C-3D-*

Button 1	Scene 1 = 100%
Button 2	Scene 3 = 50%
Raise/Lower	Raise/Lower the last button press action in the current area
Power	Toggle Scene (Scene 0/Scene 1)
Raise	Press* Increase 1% (per press) Hold* Increase 15% (per sec)
Lower	Press* Decrease 1% (per press) Hold* Decrease 15% (per sec)

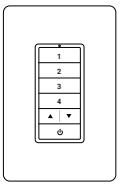

WST-C-5D-*

Button 1	Scene 1 = 100%
Button 2	Scene 2 = 70%
Button 3	Scene 3 = 50%
Button 4	Scene 4 = 30%
Raise/Lower	Raise/Lower the last button press action in the current area
Power	Toggle Scene (Scene 0/Scene 1)

Zone control

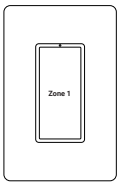

WST-C-1-Z*

Button 1	Toggle Zone (Zone OFF/Zone 100%)

*NOTE: select from zone 1 (**Z1**), zone 2 (**Z2**), zone 3 (**Z3**), or zone 4 (**Z4**)*

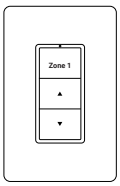

WST-C-1D-Z*

Button 1	Toggle Zone (Zone OFF/Zone 100%)
Raise/Lower	Raise/Lower the preconfigured zone in Current Area

*NOTE: select from zone 1 (**Z1**), zone 2 (**Z2**), zone 3 (**Z3**), or zone 4 (**Z4**)*

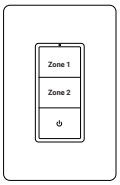

WST-C-3-Z*

Button 1	Toggle Zone (Zone OFF/Zone 100%)
Button 2	Toggle Zone (Zone OFF/Zone 100%)
Power	Toggle Scene (Scene 0/Scene 1)

*NOTE: select from zone 1&2 (**Z1Z2**) or zone 3&4 (**Z3Z4**)*

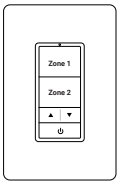

WST-C-3D-Z*

Button 1	Toggle Zone (Zone OFF/Zone 100%)
Button 2	Toggle Zone (Zone OFF/Zone 100%)
Raise/Lower	Raise/Lower the light level of the last zone or scene command
Power	Toggle Scene (Scene 0/Scene 1) Press: Toggle Scene (Scene 0/ Scene 1) Hold: Scene 0 (OFF)

*NOTE: select from zone 1&2 (**Z1Z2**) or zone 3&4 (**Z3Z4**)*

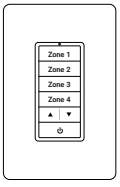

WST-C-5D-Z

Button 1	Toggle Zone 1 (Zone OFF/Zone 100%)
Button 2	Toggle Zone 2 (Zone OFF/Zone 100%)
Button 3	Toggle Zone 3 (Zone OFF/Zone 100%)
Button 4	Toggle Zone 4 (Zone OFF/Zone 100%)
Raise/Lower	Raise/Lower the light level of the last zone or scene command
Power	Toggle Scene (Scene 0/Scene 1) Press: Toggle Scene (Scene 0/ Scene 1) Hold: Scene 0 (OFF)

Note

- WaveLinx CAT mobile application is required to customize programming for each button.
- Suitable for use with standard and Decora wallplates (not included).
- Buttons are not field replaceable.

WaveLinx CAT:

Contact Closure Input Module

The Contact Closure Input module is an integral part of the WaveLinx connected lighting system and provides network addressability for a variety of analog devices. CCI module offers four dry contact inputs, that are programmable by WaveLinx mobile app. CCI module is an area-based control device within a standalone network space. The module is powered by CAT bus power and comes with mounting tabs for easy installation on the wall or a junction box.



catalog number:

CCI-C-V	CCI-C Contact Closure Input Module

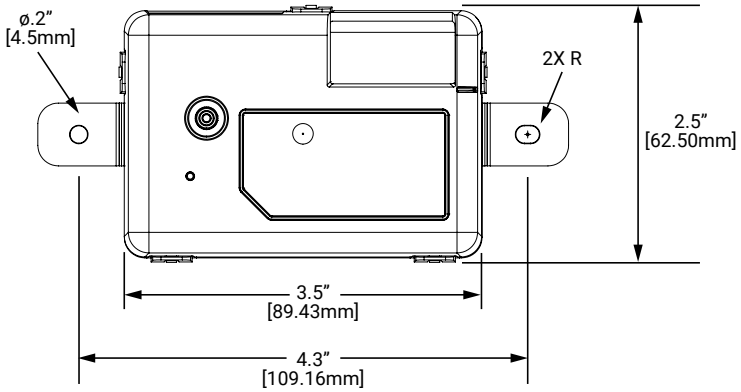

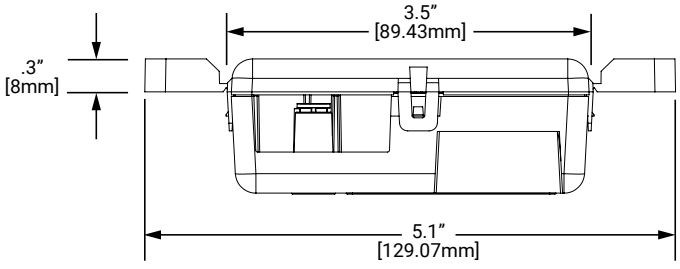

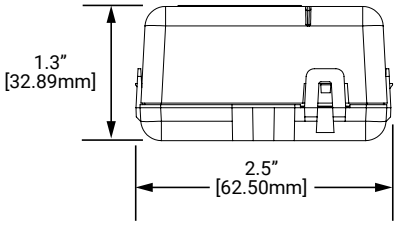

WaveLinx CAT:

Sensor Interface Module

The Sensor Interface module is an integral part of the WaveLinx connected lighting system and provides network addressability to a variety of Greengate dual tech sensors. The sensors are powered by the SIM module offers a limited configurability for sensor parameters through WaveLinx CAT mobile app.



catalog number:
SIM-C-V SIM-C Sensor Interface Module

List of compatible Greengate Sensors:



catalog number:
OAWC-DT-120W
OAWC-DT-120W-R
OAC-P-0500-R
OAC-P-1500
OAC-P-0500
OAC-DT-0501
OAC-DT-0501-R
OAC-DT-1000
OAC-DT-1000-R
OAC-DT-2000
OAC-DT-2000-R
OAC-P-1500-R
OAC-U-2000
OAC-U-2000-R
OXC-P-1500-R
OXC-P-2MH0-R
OCS-L-D-06
OCS-L-D-12
OCS-L-D-20

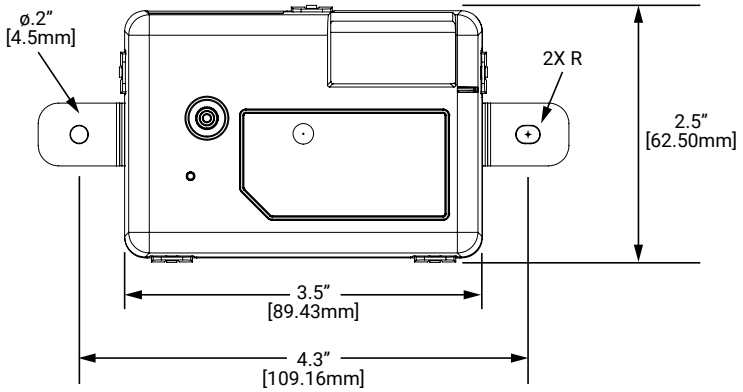

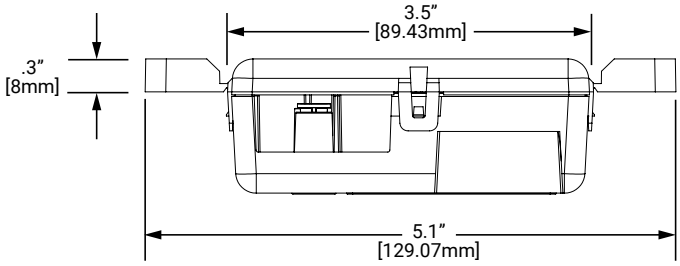

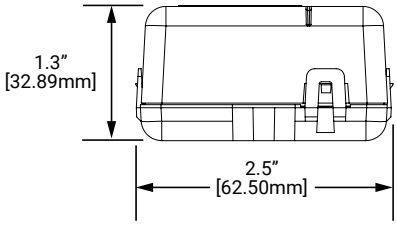

WaveLinx CAT:

BLE Programming Interface

The Bluetooth Programming Interface uses a Bluetooth Low Energy (BLE) Radio Module to allow wireless communication between the local CAT area and WaveLinx CAT mobile app. This device offers two RJ-45 ports to connect with standalone CAT network area. The WaveLinx CAT mobile app offers secure pairing with the BPI device when within range, and once connected can be used for identifying and configuring devices within that area. The module is powered by CAT bus power and comes with mounting tabs for easy installation on the wall or a junction box.



catalog number:

BPI-C-L	BPI-C Bluetooth Program Interface

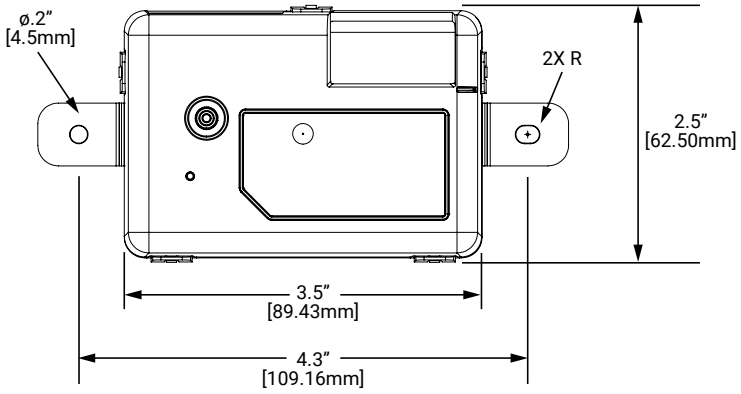

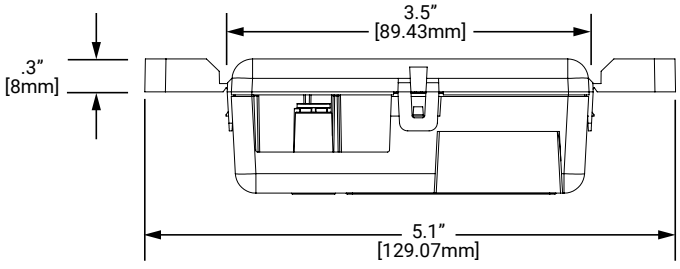

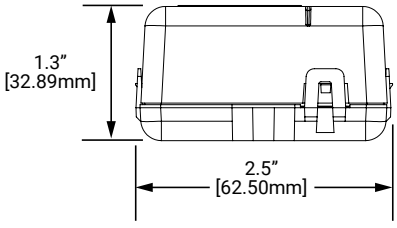

WaveLinx CAT:

Networking Device: Area Hub

The CAT Media Converter connects eight (8) C-Bus networks to one (1) ethernet connection, to communicate with the Area Controller. Powered by PoE injector / PoE Switch.

catalog number:
WAH-C-POE-ID WaveLinx Area Hub







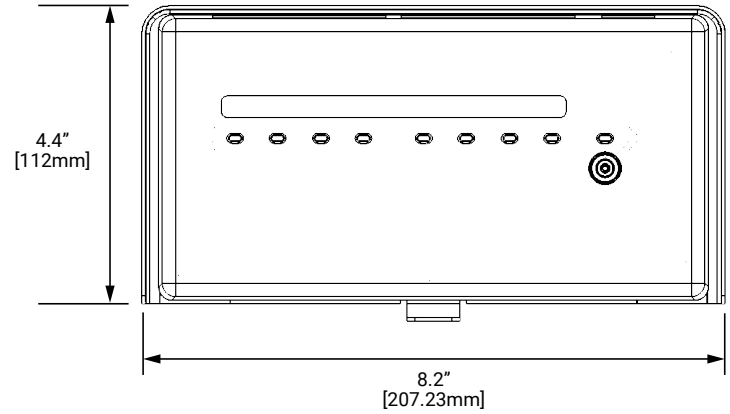

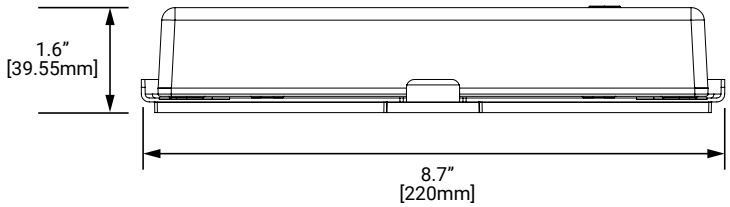

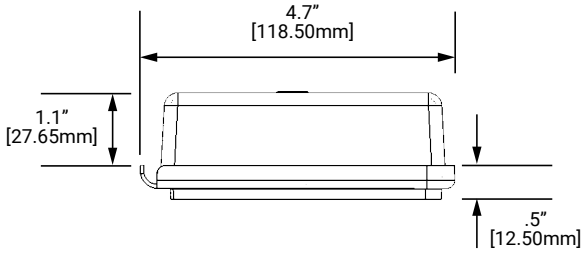

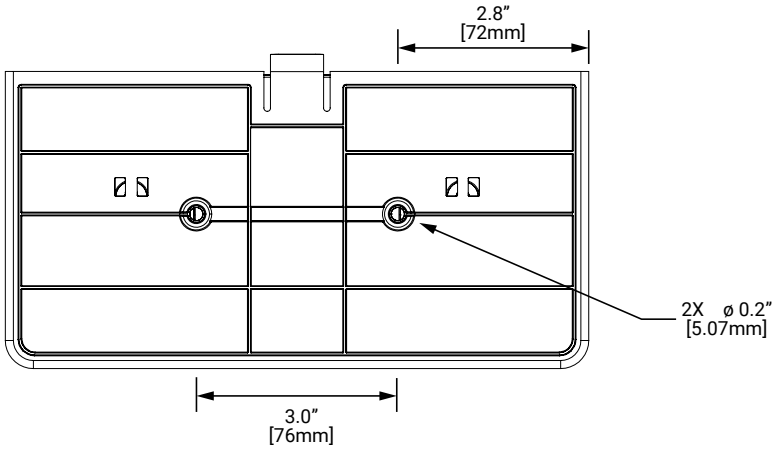

WaveLinx CAT



Simple to design

WaveLinx CAT solution

Simplified wiring

WaveLinx CAT
WST-C-* Wallstation



Designers, electrical contractors and building owners/operators use the WaveLinx connected lighting system to comply with latest energy codes, maximize energy savings and improve occupant experience.

WaveLinx CAT complies with following energy codes

ASHRAE 90.1 2022 application summary

			Atrium	Classroom	Conference Room	Corridor / Hallway	Lobby	Open Office (>300 sq ft)	Private Office (<300 sq ft)	Storage Room
Manual Control	Switch									● ○
	Dimmer or Scene Control		● ○	● ○	● ○	● ○	● ○	● ○	● ○	
Automatic ON / OFF Control	Timeclock		● ○				● ○			
	Occupancy Sensor			● ○	● ○	● ○	● ○	● ○	● ○	● ○
	Settings	Full ON				● ○	● ○			
		Partial ON	● ○					● ○		
		Manual ON		● ○	● ○				● ○	● ○
		Full OFF	● ○	● ○	● ○		● ○	● ○	● ○	● ○
		Partial OFF				● ○	● ○			
Other	Daylight Responsive Control		●	●	●	●	●	●	●	●
	Receptacle Control			● ○	● ○			● ○	● ○	
	Demand Response									

IECC - 2021 application summary

			Atrium	Classroom	Conference Room	Corridor / Hallway	Lobby	Open Office (>300 sq ft)	Private Office (<300 sq ft)	Storage Room
Manual Control	Switch			● ○	● ○			● ○	● ○	● ○
	Dimmer or Scene Control		● ○			● ○	● ○	● ○		
Automatic ON / OFF Control	Timeclock		● ○							
	Occupancy Sensor			● ○	● ○	● ○	● ○	● ○	● ○	● ○
	Settings	Full ON				● ○	● ○			
		Partial ON	● ○					● ○		
		Manual ON		● ○	● ○				● ○	● ○
		Full OFF	● ○	● ○	● ○		● ○	● ○	● ○	● ○
		Partial OFF				● ○		● ○		
Other	Daylight Responsive Control		● ○	● ○	● ○	● ○	● ○	● ○	● ○	● ○
	Receptacle Control			● ○	● ○			● ○	● ○	
	Demand Response									

● New Construction ○ Retrofit

WaveLinx CAT complies with following energy codes

Title 24 - 2022 application summary

		Atrium	Classroom	Conference Room	Egress Hallway	Lobby	Open Office (>250 sq ft)	Private Office (<250 sq ft)	Egress Hallway	Storage Room
Manual Control	Switch	○	○	○	○	○	○	○	○	○
	Dimmer or Scene Control	●	●	●	●	●	●	●	●	●
Automatic ON / OFF Control	Timeclock	● ○								
	Occupancy Sensor		● ○	● ○	● ○	● ○	● ○	● ○	● ○	● ○
	Settings: Full ON				● ○	● ○	● ○		● ○	● ○
	Settings: Partial ON	● ○	● ○							
	Settings: Full OFF	● ○	● ○	● ○		● ○	● ○	● ○		● ○
	Settings: Partial OFF				● ○				● ○	
Other	Daylight Responsive Control	●	●	●	●	●	●		●	●
	Receptacle Control			●		●	●	●		
	Demand Response	●	●	●	●	●	●	●	●	●

● New Construction ○ Retrofit

Built-in energy saving lighting control strategies

STRATEGY	DESCRIPTION	ESTIMATED SAVINGS
Manual Dimmer	**Manual/personal dimming control –** one of five alternative methods that meets the multi-level lighting control requirements.	**10-20%**
Occupancy Sensor	**Occupancy/vacancy sensing –** provides Manual On/Automatic Off or Automatic On/ Automatic Off and Partial Off capabilities.	**20-60%**
Daylighting Control	**Daylight dimming –** provides multiple daylight dimming zones that automatically adjust the lighting based on daylight available in the space, or fixture integrated sensors, for completely granular daylighting control.	**20-45%**
Receptacle Control	**Plug load control –** automatically turns On receptacles upon occupancy regardless of light status. Ensures receptacles are turned Off when the space is vacant.	**15-50% Controlled loads**
Task Tuning	**High-end/task tuning –** lowers the maximum light level for automatic energy savings.	**10-30%**
Demand Response	**Demand response –** automatically reduces light level based on signal from 3rd-party system.	**10-40%**
Remote Signal Control	**BACnet –** coordinates control through BMS **Remote signal control –** communicates to 3rd-party systems via API.	**20%**



Typical applications wiring diagrams

WaveLinx CAT:

Switchpack

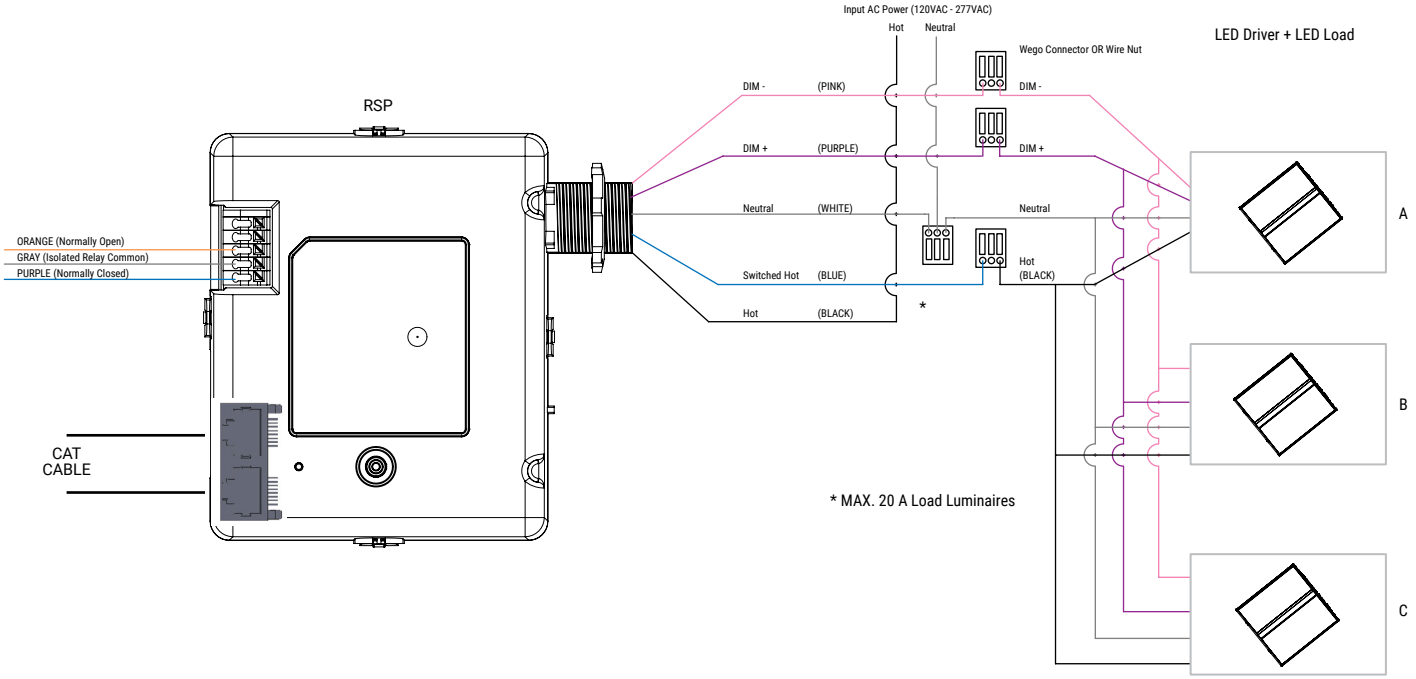

WaveLinx CAT:

Emergency Switchpack

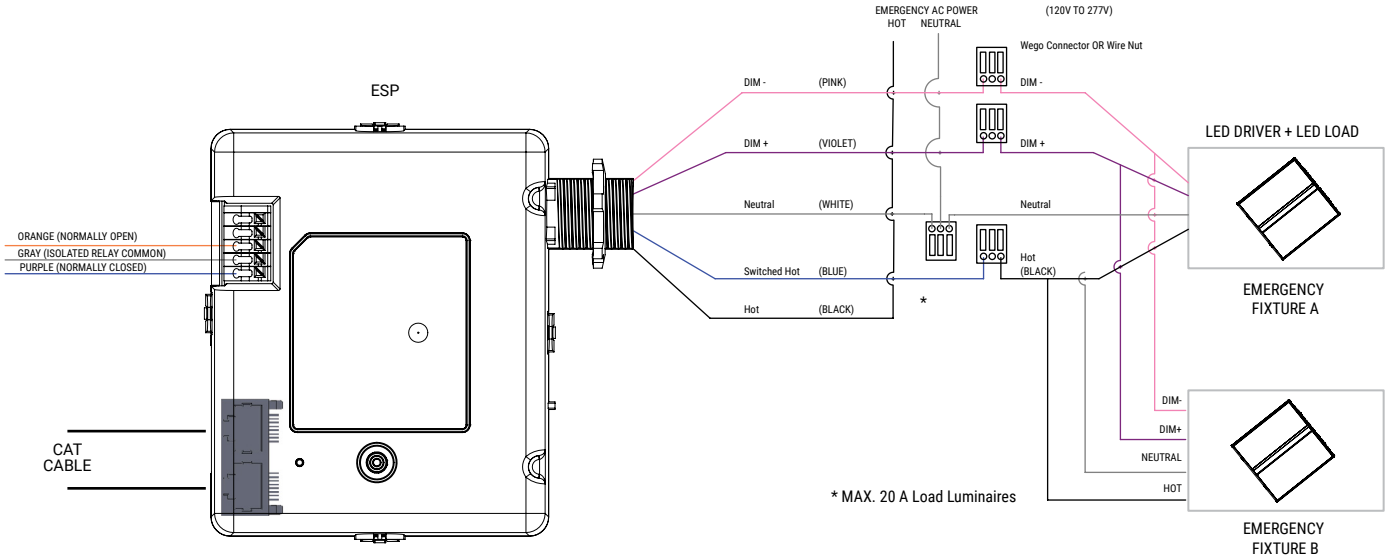

WaveLinx CAT:

Contact Closure Input Module

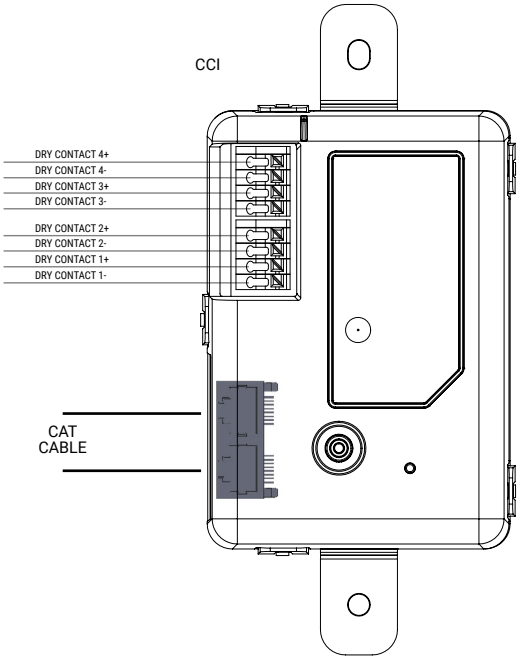

WaveLinx CAT:

Occupancy and Daylight Sensor

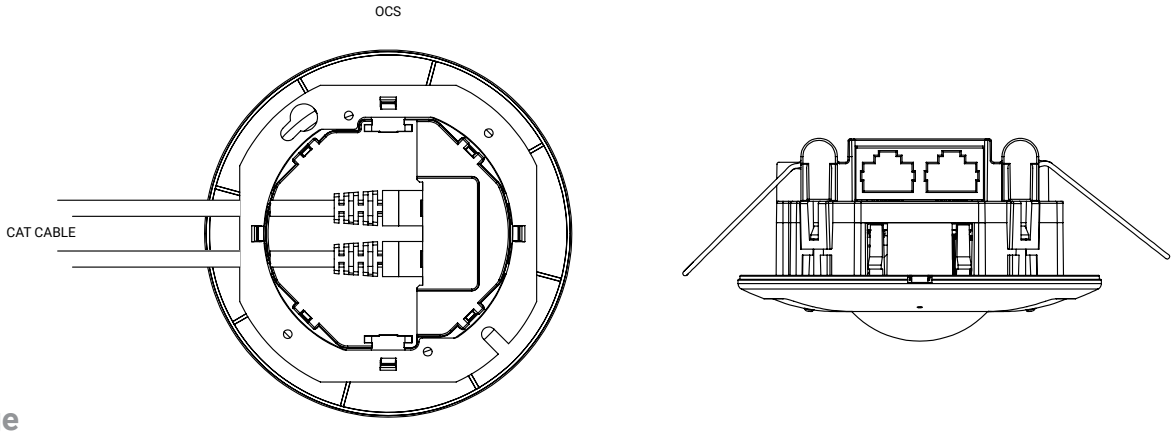

Coverage

OCS-C-D06 (600 sqft)
OCS-C-P06 (600 sqft)

TOP VIEW:

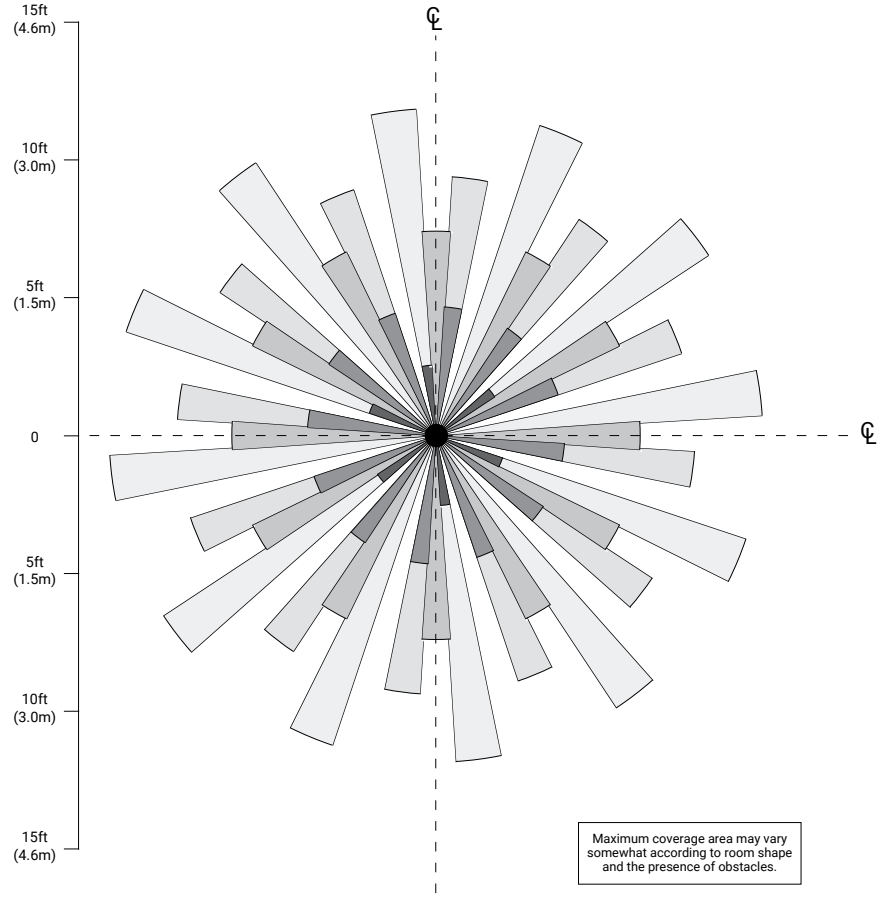

Maximum coverage area may vary somewhat according to room shape and the presence of obstacles.

SIDE VIEW:

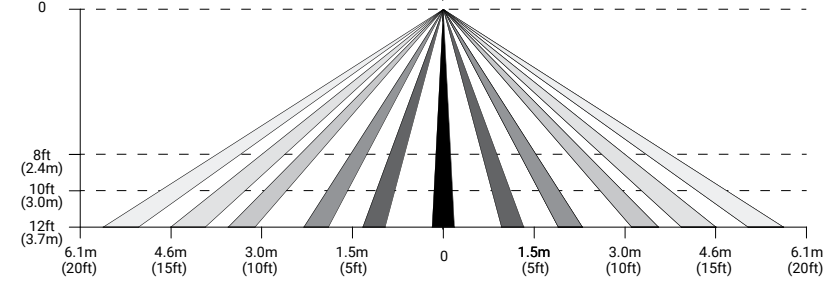

WaveLinx CAT:

Occupancy and Daylight Sensor

Coverage

OCS-C-D12 (1200 sqft)
OCS-C-P12 (1200 sqft)

TOP VIEW:

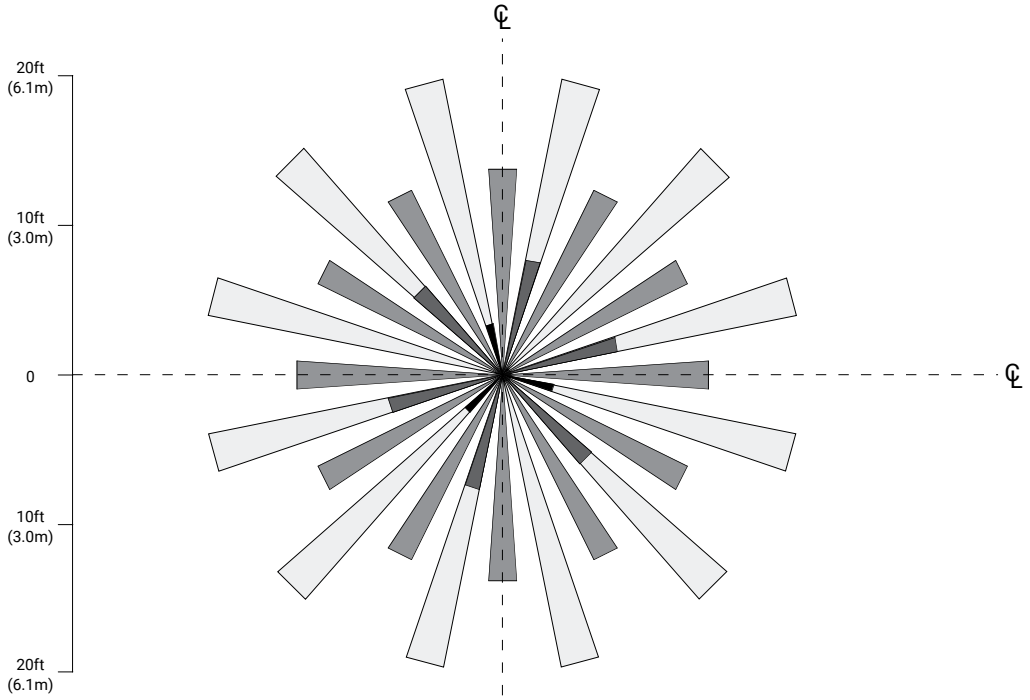

Maximum coverage area may vary somewhat according to room shape and the presence of obstacles.

SIDE VIEW:

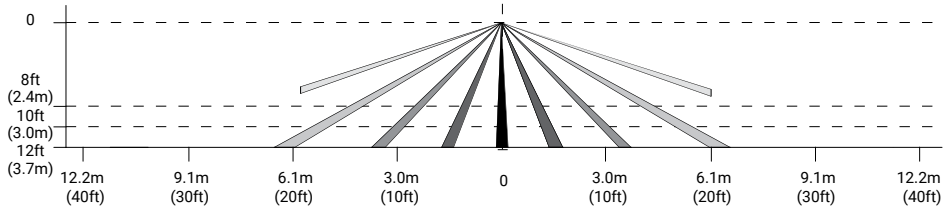

WaveLinx CAT:

Occupancy and Daylight Sensor

Coverage

OCS-C-D20 (2000 sq ft)

TOP VIEW:

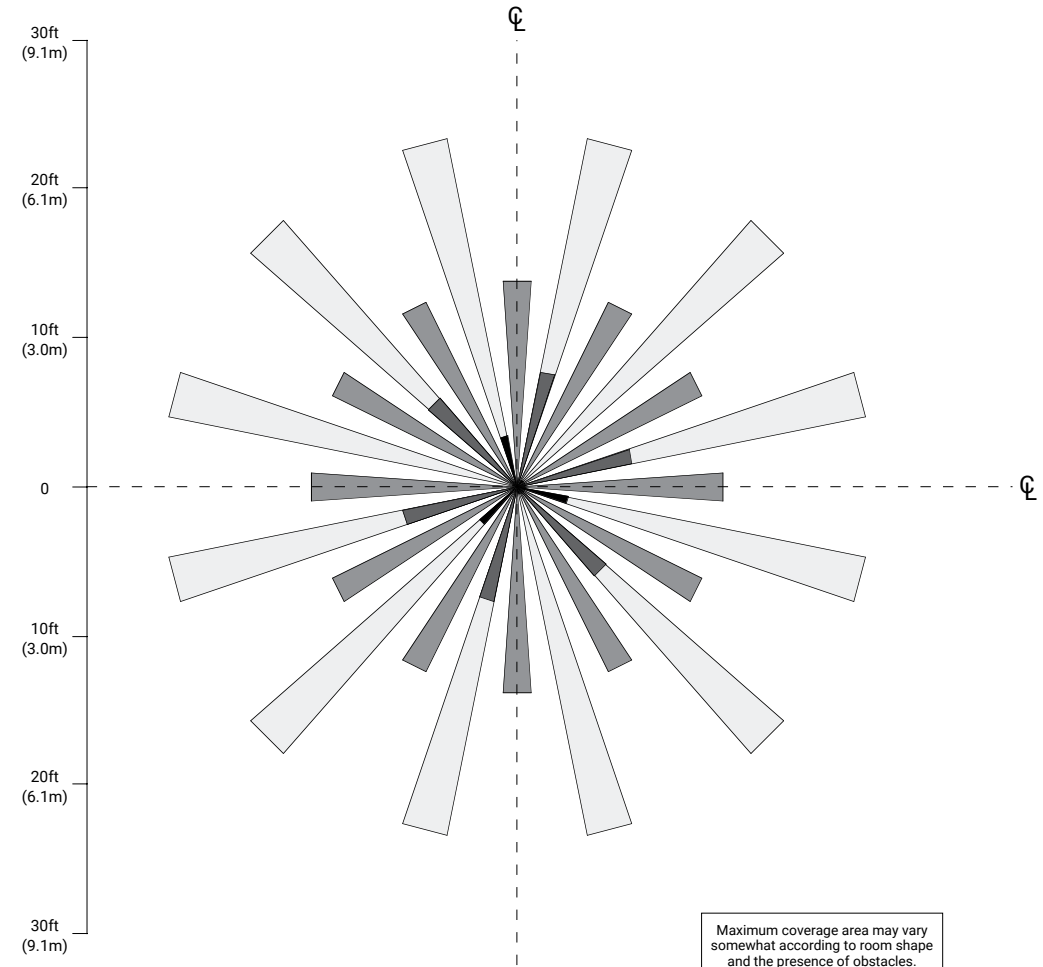

SIDE VIEW:

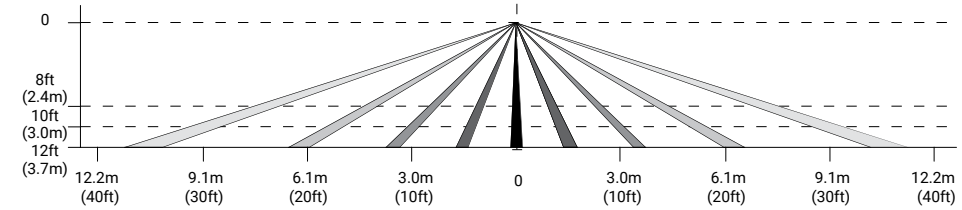

WaveLinx CAT:

Sensor Interface Module

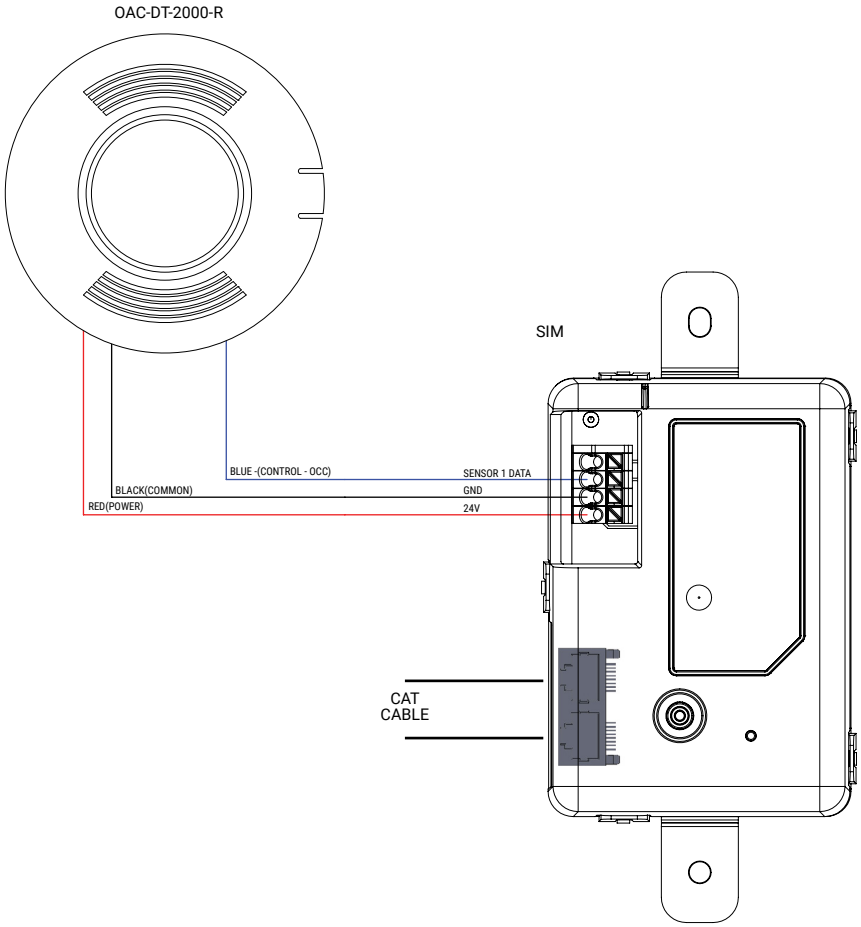

List of compatible Greengate Sensors:



catalog number:

OAWC-DT-120W
OAWC-DT-120W-R
OAC-P-0500-R
OAC-P-1500
OAC-P-0500
OAC-DT-0501
OAC-DT-0501-R
OAC-DT-1000
OAC-DT-1000-R
OAC-DT-2000
OAC-DT-2000-R
OAC-P-1500-R
OAC-U-2000
OAC-U-2000-R
OXC-P-1500-R
OXC-P-2MH0-R
OCS-L-D-06
OCS-L-D-12
OCS-L-D-20

WaveLinx CAT:

Networking Device: Area Hub

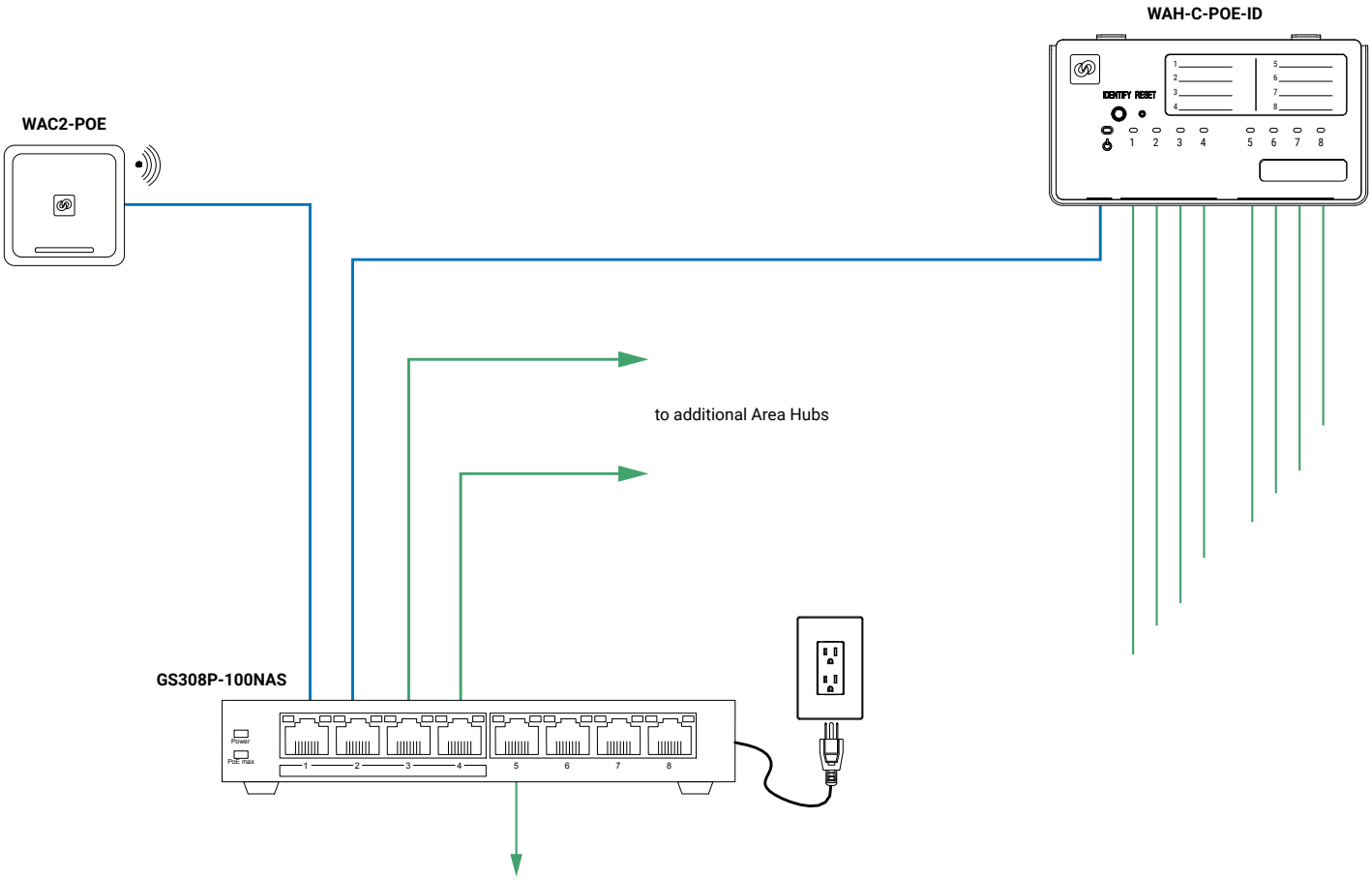

Basic steps to design a WaveLinx CAT system

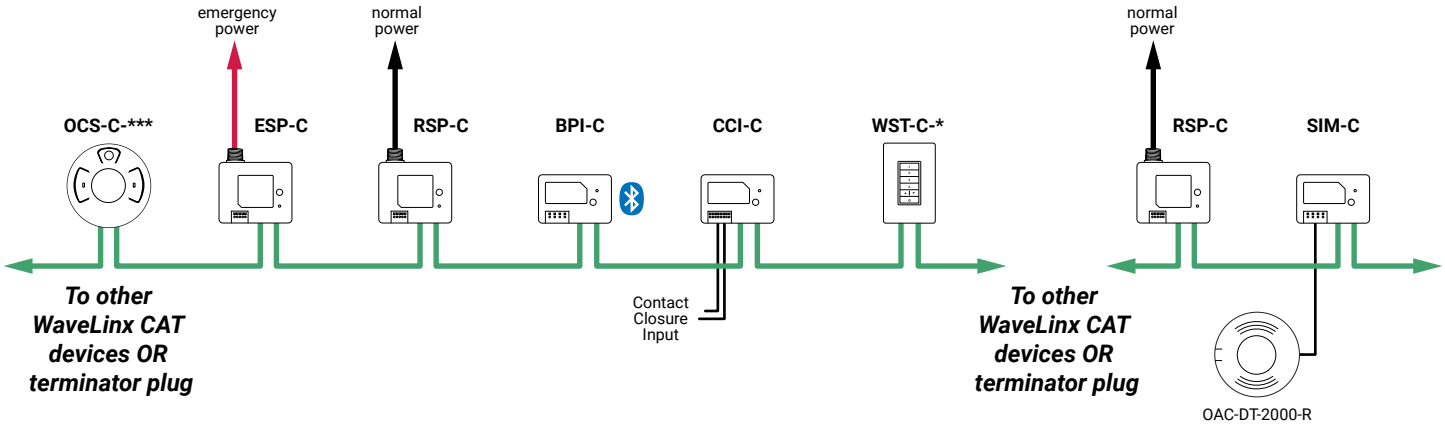

Reliable communication

Merge wired stability with wireless flexibility for reliable, seamless data flow, and adaptability in any environment.

WaveLinx CAT devices communicate over category cable using an ultra-reliable proprietary protocol.

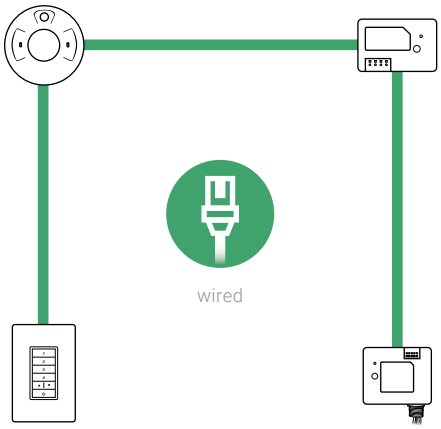

Classroom

	Manually Switched ON / OFF	Manual Dimmer	Manual ON / Auto OFF	Occupancy Sensor	Daylighting Control	Lumen Maintenance Control	Tuning Control	Receptacle Control	Demand Response
IECC 2021	•	•	•	•	•	•	•		
ASHRAE 90.1 - 2022	•	•	•	•	•	•	•	•	•
T24 2022	•	•	•	•	•	•	•	•	•
NECB 2017	•	•	•	•	•	•	•		

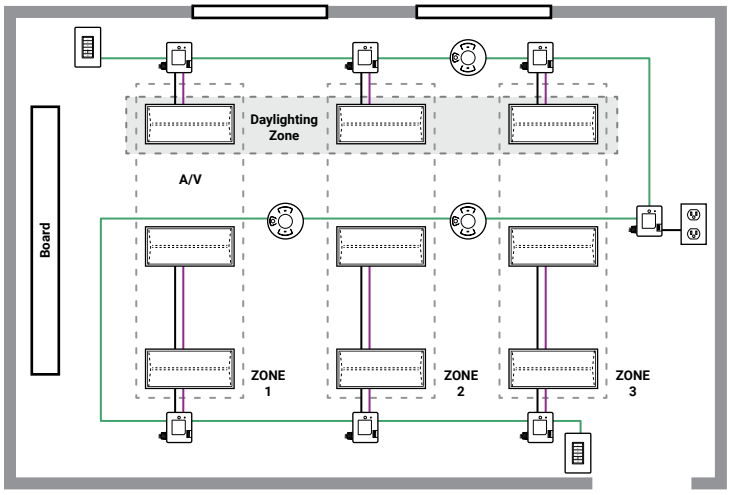

KEY
- CAT5 cable
- 0-10V
- Line voltage
- EM Line voltage
- Zones

Sequence of Operations

Lighting
- 0-10V lighting loads
- 20A switching load
- Up to 16 zones
- Up to 40 devices per local CAT network
- Out of the box 75% high end trim

Occupancy
- Automatic auto on to 50%
- Optional vacancy mode
- Optional auto on to scene
- Plug load turns on with occupancy
- Automatic off of lighting and plug load on vacancy

Daylighting
- Daylighting not required for indoor spaces without windows
- Not required in spaces without windows or that are less than 150W *(120W for ASHRAE / Title 24)*

Manual Controls
- Programmable scenes
- Dominant button is 50% light level
- Scene raise / Scene lower
- All off

Additional Features
- Energy calculations (available through WaveLinx CORE)
- Automatic demand response through WaveLinx Area Controller
- Scheduling of partial off light levels from WaveLinx Area Controller
- UL924 emergency control capabilities via ESP-C devices

Bill of Material

Quantity	Catalog #	Description
5	RSP-C-010-Z1	RSP-C Relay Switchpack - Zone 1
1	RSP-C-010-Z2	RSP-C Relay Switchpack - Zone 2
1	RSP-C-010-Z3	RSP-C Relay Switchpack - Zone 3
3	OCS-C-P06	OCS-C Occ Ceiling Sensor 600 sqft
2	WST-C-3D	WST-C Wallstation 3 button dimming
9	24EN-LD2-34-UNV-L835-CD1-U	Encounter 2x4

Design Consideration	Best Practice	Maximum
Length of CAT5 cable	800 ft	1000 ft
Number of CAT devices	40	50
Number of zones per area	16	16
Number of scenes per area	16	16
Number of power supplies (RSP) per area	3	30

Typical Wiring Detail

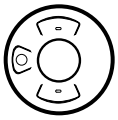

OCS-C-P- *
Occupancy Sensor

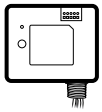

RSP-C-010-Z- *
Switchpack

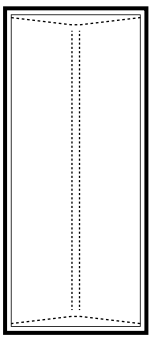

Light Fixture

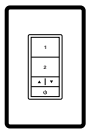

WST-C- *
Wallstation

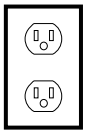

WR-20
Receptacle

	Local Control	Manual ON	Partial ON	Bilevel Lighting	Daylight Side	Daylight Top	Partial OFF	Automatic OFF	Scheduled OFF	Receptacle Control	Energy Monitoring	Functional Testing	Demand Response
IECC 2021	C405.2.5	C405.2.5	C405.2.2.1.2		C405.2.3.2	C405.2.3.3	C405.2.1.3	C405.2.1.1.1	C405.2.2	C405.2.4		C408.3	
ASHRAE 90.1-2022	9.4.1 (a)	9.4.1.1 (b)	9.4.1.1 (c)	9.4.1.1 (d)	9.4.1.1 (e)	9.4.1.1 (f)	9.4.1.1 (g)	9.4.1.1 (h)	9.4.1.1 (i)	8.4.2	8.4.3.2	9.4.3	
T24 2022	130.1 (a)(b)	130.1 (a)(b)	130.1 (b)		130.1 (d)	130.1 (d)	130.1 (c).6	130.1 (c).5	130.1 (c)	130.5 (d)	130.5 (b)	130.4	130.1 (e) 130.1 (e)
NECB 2017	4.2.2.1.(3)	4.2.2.1.(3), 4.2.2.1.(6)	4.2.2.1 (8)	4.2.2.1.(9)	4.2.2.1.(10)	4.2.2.1.(13)	4.2.4.1. (16-17)	4.2.2.1. (18-19)	4.2.2.1. (20-23)				

Conference Room

	Manually Switched ON / OFF	Manual Dimmer	Manual ON / Auto OFF	Occupancy Sensor	Daylighting Control	Lumen Maintenance Control	Tuning Control	Receptacle Control	Demand Response
IECC 2021	•	•	•	•	•	•	•		
ASHRAE 90.1 - 2022	•	•	•	•	•	•	•	•	•
T24 2022	•	•	•	•	•	•	•	•	•
NECB 2017	•	•	•	•	•	•	•		

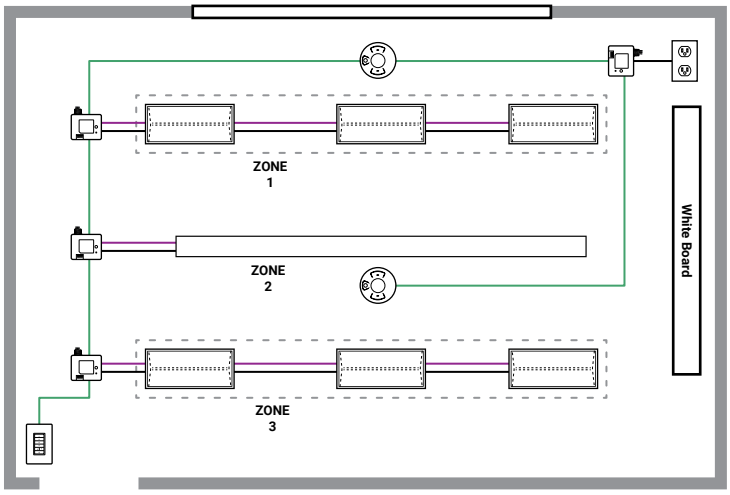

KEY
- CAT5 cable
- 0-10V
- Line voltage
- EM Line voltage
- Zones

Sequence of Operations

Lighting
- 0-10V lighting loads
- 20A switching load
- Up to 16 zones
- Up to 40 devices per local CAT network
- Out of the box 75% high end trim

Occupancy
- Automatic auto on to 50%
- Optional vacancy mode
- Optional auto on to scene
- Plug load turns on with occupancy
- Automatic off of lighting and plug load on vacancy

Daylighting
- Daylighting not required for indoor spaces without windows
- Not required in spaces without windows or that are less than 150W *(120W for ASHRAE / Title 24)*

Manual Controls
- Programmable scenes
- Dominant button is 50% light level
- Scene raise / Scene lower
- All off

Additional Features
- Energy calculations (available through WaveLinx CORE)
- Automatic demand response through WaveLinx Area Controller
- Scheduling of partial off light levels from WaveLinx Area Controller
- UL924 emergency control capabilities via ESP-C devices

Bill of Material

Quantity	Catalog #	Description
2	RSP-C-010-Z1	RSP-C Relay Switchpack - Zone 1
1	RSP-C-010-Z2	RSP-C Relay Switchpack - Zone 2
1	RSP-C-010-Z3	RSP-C Relay Switchpack - Zone 3
2	OCS-C-P06	OCS-C Occ Ceiling Sensor 600 sqft
1	WST-C-3D	WST-C Wallstation 3 button dimming
6	24EN-LD2-34-UNV-L835-CD1-U	Encounter 2x4
1	8WSL-LD2-80-SRC-UNV-L840-CD1-U	WSL 8ft Linear

Design Consideration	Best Practice	Maximum
Length of CAT5 cable	800 ft	1000 ft
Number of CAT devices	30	50
Number of zones per area	16	16
Number of scenes per area	16	16
Number of power supplies (RSP) per area	3	30

Typical Wiring Detail

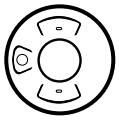

OCS-C-P- *
Occupancy Sensor

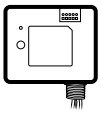

RSP-C-010-Z- *
Switchpack

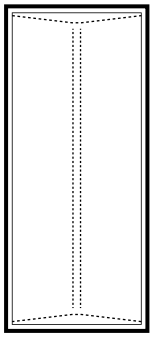

Light Fixtures

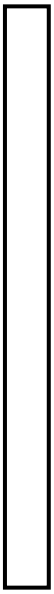

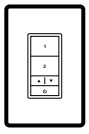

WST-C- *
Wallstation

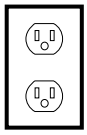

WR-20
Receptacle

	Local Control	Manual ON	Partial ON	Bilevel Lighting	Daylight Side	Daylight Top	Partial OFF	Automatic OFF	Scheduled OFF	Receptacle Control	Energy Monitoring	Functional Testing	Demand Response
IECC 2021	C405.2.5	C405.2.5	C405.2.2.1.2		C405.2.3.2	C405.2.3.3	C405.2.1.3	C405.2.1.1.1	C405.2.2	C405.2.4		C408.3	
ASHRAE 90.1-2022	9.4.1 (a)	9.4.1.1 (b)	9.4.1.1 (c)	9.4.1.1 (d)	9.4.1.1 (e)	9.4.1.1 (f)	9.4.1.1 (g)	9.4.1.1 (h)	9.4.1.1 (i)	8.4.2	8.4.3.2	9.4.3	
T24 2022	130.1 (a)(b)	130.1 (a)(b)	130.1 (b)		130.1 (d)	130.1 (d)	130.1 (c).6	130.1 (c).5	130.1 (c)	130.5 (d)	130.5 (b)	130.4	130.1 (e) 130.1 (e)
NECB 2017	4.2.2.1.(3)	4.2.2.1.(3), 4.2.2.1.(6)	4.2.2.1 (8)	4.2.2.1.(9)	4.2.2.1.(10)	4.2.2.1.(13)	4.2.4.1. (16-17)	4.2.2.1. (18-19)	4.2.2.1. (20-23)				

Corridor

	Manually Switched ON / OFF	Manual Dimmer	Manual ON / Auto OFF	Occupancy Sensor	Daylighting Control	Lumen Maintenance Control	Tuning Control	Receptacle Control	Demand Response
IECC 2021	•	•	•	•	•	•	•		
ASHRAE 90.1 - 2022	•	•	•	•	•	•	•	•	•
T24 2022	•	•	•	•	•	•	•	•	•
NECB 2017	•	•	•	•	•	•	•		

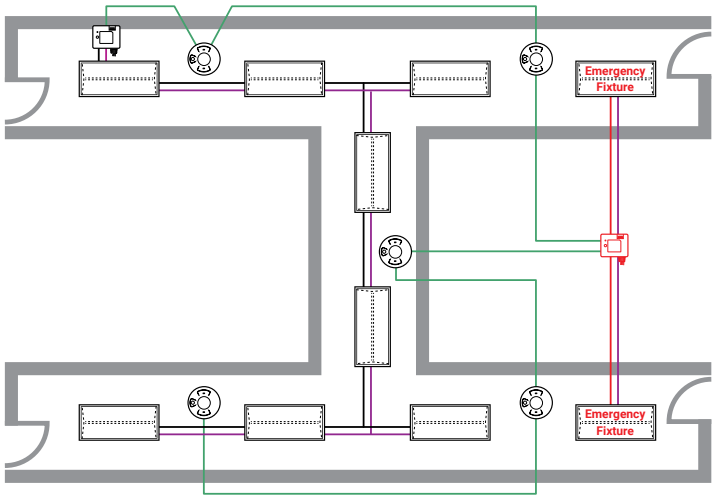

KEY
- CAT5 cable
- 0-10V
- Line voltage
- EM Line voltage
- Zones

Sequence of Operations

Lighting
- 0-10V lighting loads
- 20A switching load
- Up to 16 zones
- Up to 40 devices per local CAT network
- Out of the box 75% high end trim

Occupancy
- Automatic auto on to 50%
- Optional vacancy mode
- Optional auto on to scene
- Plug load turns on with occupancy
- Automatic off of lighting and plug load on vacancy

Daylighting
- Daylighting not required for indoor spaces without windows
- Not required in spaces without windows or that are less than 150W *(120W for ASHRAE / Title 24)*

Manual Controls
- Programmable scenes
- Dominant button is 50% light level
- Scene raise / Scene lower
- All off

Additional Features
- Energy calculations (available through WaveLinx CORE)
- Automatic demand response through WaveLinx Area Controller
- Scheduling of partial off light levels from WaveLinx Area Controller
- UL924 emergency control capabilities via ESP-C devices

Bill of Material

Quantity	Catalog #	Description
1	RSP-C-010-Z1	RSP-C Relay Switchpack - Zone 1
1	ESP-C-010-Z1	ESP-C Emergency Relay Switchpack - Zone 1
5	OCS-C-P06	OCS-C Occ Ceiling Sensor 600 sqft
10	24EN-LD2-34-UNV-L835-CD1-U	Encounter 2x4

Typical Wiring Detail

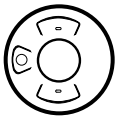

OCS-C-P- *
Occupancy Sensor

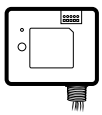

RSP-C-010-Z- *
Switchpack

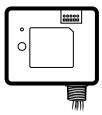

ESP-C-010-Z-1
Switchpack

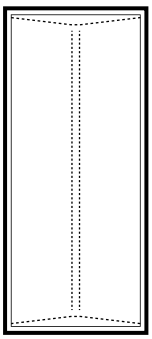

Light Fixture

Design Consideration	Best Practice	Maximum
Length of CAT5 cable	800 ft	1000 ft
Number of CAT devices	30	50
Number of zones per area	16	16
Number of scenes per area	16	16
Number of power supplies (RSP) per area	3	30

	Local Control	Manual ON	Partial ON	Bilevel Lighting	Daylight Side	Daylight Top	Partial OFF	Automatic OFF	Scheduled OFF	Receptacle Control	Energy Monitoring	Functional Testing	Demand Response
IECC 2021	C405.2.5	C405.2.5	C405.2.2.1.2		C405.2.3.2	C405.2.3.3	C405.2.1.3	C405.2.1.1.1	C405.2.2	C405.2.4		C408.3	
ASHRAE 90.1-2022	9.4.1 (a)	9.4.1.1 (b)	9.4.1.1 (c)	9.4.1.1 (d)	9.4.1.1 (e)	9.4.1.1 (f)	9.4.1.1 (g)	9.4.1.1 (h)	9.4.1.1 (i)	8.4.2	8.4.3.2	9.4.3	
T24 2022	130.1 (a)(b)	130.1 (a)(b)	130.1 (b)		130.1 (d)	130.1 (d)	130.1 (c).6	130.1 (c).5	130.1 (c)	130.5 (d)	130.5 (b)	130.4	130.1 (e) 130.1 (e)
NECB 2017	4.2.2.1.(3)	4.2.2.1.(3), 4.2.2.1.(6)	4.2.2.1 (8)	4.2.2.1.(9)	4.2.2.1.(10)	4.2.2.1.(13)	4.2.4.1. (16-17)	4.2.2.1. (18-19)	4.2.2.1. (20-23)				

Private Office

	Manually Switched ON / OFF	Manual Dimmer	Manual ON / Auto OFF	Occupancy Sensor	Daylighting Control	Lumen Maintenance Control	Tuning Control	Receptacle Control	Demand Response
IECC 2021	•	•	•	•	•	•	•		
ASHRAE 90.1 - 2022	•	•	•	•	•	•	•	•	•
T24 2022	•	•	•	•	•	•	•	•	•
NECB 2017	•	•	•	•	•	•	•		

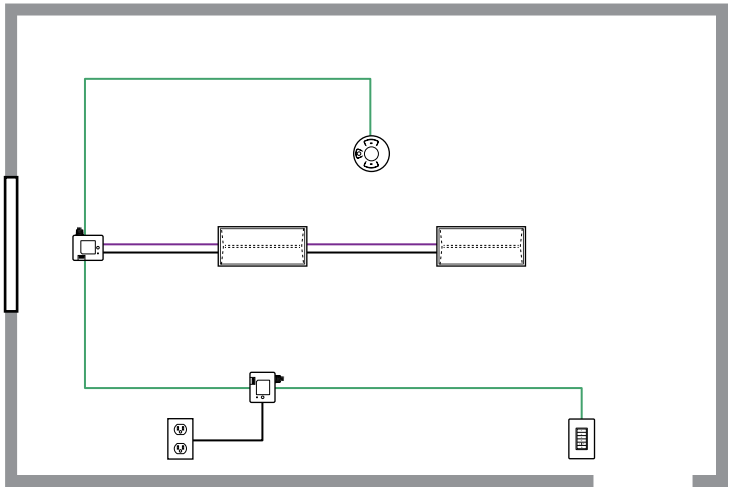

KEY
- CAT5 cable
- 0-10V
- Line voltage
- EM Line voltage
- Zones

Sequence of Operations

Lighting
- 0-10V lighting loads
- 20A switching load
- Up to 16 zones
- Up to 40 devices per local CAT network
- Out of the box 75% high end trim

Occupancy
- Automatic auto on to 50%
- Optional vacancy mode
- Optional auto on to scene
- Plug load turns on with occupancy
- Automatic off of lighting and plug load on vacancy

Daylighting
- Daylighting not required for indoor spaces without windows
- Not required in spaces without windows or that are less than 150W *(120W for ASHRAE / Title 24)*

Manual Controls
- Programmable scenes
- Dominant button is 50% light level
- Scene raise / Scene lower
- All off

Additional Features
- Energy calculations (available through WaveLinx CORE)
- Automatic demand response through WaveLinx Area Controller
- Scheduling of partial off light levels from WaveLinx Area Controller
- UL924 emergency control capabilities via ESP-C devices

Bill of Material

Quantity	Catalog #	Description
5	RSP-C-010-Z1	RSP-C Relay Switchpack - Zone 1
1	WST-C-3D	WST-C Wallstation 3 button dimming
1	OCS-C-P06	OCS-C Occ Ceiling Sensor 600 sqft
2	24EN-LD2-34-UNV-L835-CD1-U	Encounter 2x4

Typical Wiring Detail

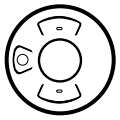

OCS-C-P- *
Occupancy Sensor

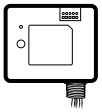

RSP-C-010-Z- *
Switchpack

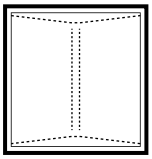

Light Fixture

Design Consideration	Best Practice	Maximum
Length of CAT5 cable	800 ft	1000 ft
Number of CAT devices	30	50
Number of zones per area	16	16
Number of scenes per area	16	16
Number of power supplies (RSP) per area	3	30



WST-C- *
Wallstation

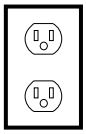

WR-20
Receptacle

	Local Control	Manual ON	Partial ON	Bilevel Lighting	Daylight Side	Daylight Top	Partial OFF	Automatic OFF	Scheduled OFF	Receptacle Control	Energy Monitoring	Functional Testing	Demand Response
IECC 2021	C405.2.5	C405.2.5	C405.2.2.1.2		C405.2.3.2	C405.2.3.3	C405.2.1.3	C405.2.1.1.1	C405.2.2	C405.2.4		C408.3	
ASHRAE 90.1-2022	9.4.1 (a)	9.4.1.1 (b)	9.4.1.1 (c)	9.4.1.1 (d)	9.4.1.1 (e)	9.4.1.1 (f)	9.4.1.1 (g)	9.4.1.1 (h)	9.4.1.1 (i)	8.4.2	8.4.3.2	9.4.3	
T24 2022	130.1 (a)(b)	130.1 (a)(b)	130.1 (b)		130.1 (d)	130.1 (d)	130.1 (c).6	130.1 (c).5	130.1 (c)	130.5 (d)	130.5 (b)	130.4	130.1 (e) 130.1 (e)
NECB 2017	4.2.2.1.(3)	4.2.2.1.(3), 4.2.2.1.(6)	4.2.2.1 (8)	4.2.2.1.(9)	4.2.2.1.(10)	4.2.2.1.(13)	4.2.4.1. (16-17)	4.2.2.1. (18-19)	4.2.2.1. (20-23)				

Open Office

	Manually Switched ON / OFF	Manual Dimmer	Manual ON / Auto OFF	Occupancy Sensor	Daylighting Control	Lumen Maintenance Control	Tuning Control	Receptacle Control	Demand Response
IECC 2021	•	•	•	•	•	•	•		
ASHRAE 90.1 - 2022	•	•	•	•	•	•	•	•	•
T24 2022	•	•	•	•	•	•	•	•	•
NECB 2017	•	•	•	•	•	•	•		

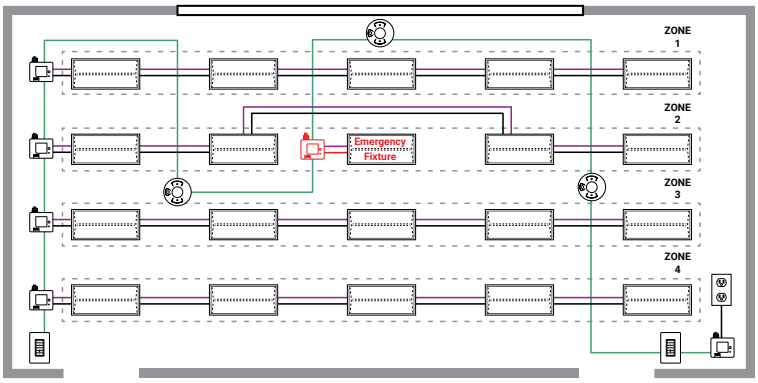

KEY
- CAT5 cable
- 0-10V
- Line voltage
- EM Line voltage
- Zones

Sequence of Operations

Lighting
- 0-10V lighting loads
- 20A switching load
- Up to 16 zones
- Up to 40 devices per local CAT network
- Out of the box 75% high end trim

Occupancy
- Automatic auto on to 50%
- Optional vacancy mode
- Optional auto on to scene
- Plug load turns on with occupancy
- Automatic off of lighting and plug load on vacancy

Daylighting
- Daylighting not required for indoor spaces without windows
- Not required in spaces without windows or that are less than 150W *(120W for ASHRAE / Title 24)*

Manual Controls
- Programmable scenes
- Dominant button is 50% light level
- Scene raise / Scene lower
- All off

Additional Features
- Energy calculations (available through WaveLinx CORE)
- Automatic demand response through WaveLinx Area Controller
- Scheduling of partial off light levels from WaveLinx Area Controller
- UL924 emergency control capabilities via ESP-C devices

Bill of Material

Quantity	Catalog #	Description
5	RSP-C-010-Z1	RSP-C Relay Switchpack - Zone 1
1	ESP-C-010-Z1	ESP-C Emergency Relay Switchpack - Zone 1
3	OCS-C-P06	OCS-C Occ Ceiling Sensor 600 sqft
2	WST-C-3D	WST-C Wallstation 3 button dimming
20	24EN-LD2-34-UNV-L835-CD1-U	Encounter 2x4

Typical Wiring Detail

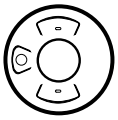

OCS-C-P- *
Occupancy Sensor

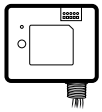

RSP-C-010-Z- *
Switchpack

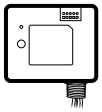

ESP-C-010-Z-1
Emergency Switchpack

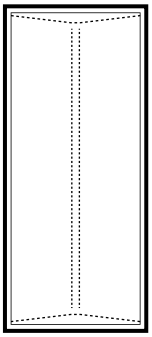

Light Fixture



WST-C- *
Wallstation

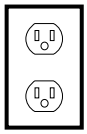

WR-20
Receptacle

Design Consideration	Best Practice	Maximum
Length of CAT5 cable	800 ft	1000 ft
Number of CAT devices	30	50
Number of zones per area	16	16
Number of scenes per area	16	16
Number of power supplies (RSP) per area	3	30

	Local Control	Manual ON	Partial ON	Bilevel Lighting	Daylight Side	Daylight Top	Partial OFF	Automatic OFF	Scheduled OFF	Receptacle Control	Energy Monitoring	Functional Testing	Demand Response
IECC 2021	C405.2.5	C405.2.5	C405.2.2.1.2		C405.2.3.2	C405.2.3.3	C405.2.1.3	C405.2.1.1.1	C405.2.2	C405.2.4		C408.3	
ASHRAE 90.1-2022	9.4.1 (a)	9.4.1.1 (b)	9.4.1.1 (c)	9.4.1.1 (d)	9.4.1.1 (e)	9.4.1.1 (f)	9.4.1.1 (g)	9.4.1.1 (h)	9.4.1.1 (i)	8.4.2	8.4.3.2	9.4.3	
T24 2022	130.1 (a)(b)	130.1 (a)(b)	130.1 (b)		130.1 (d)	130.1 (d)	130.1 (c).6	130.1 (c).5	130.1 (c)	130.5 (d)	130.5 (b)	130.4	130.1 (e) 130.1 (e)
NECB 2017	4.2.2.1.(3)	4.2.2.1.(3), 4.2.2.1.(6)	4.2.2.1 (8)	4.2.2.1.(9)	4.2.2.1.(10)	4.2.2.1.(13)	4.2.4.1. (16-17)	4.2.2.1. (18-19)	4.2.2.1. (20-23)				

WaveLinx CAT and Networked Relay Panel: Network Solution

- Up to 8 areas connected through Area Hub
- WaveLinx Area Controller connects multiple areas



Example:

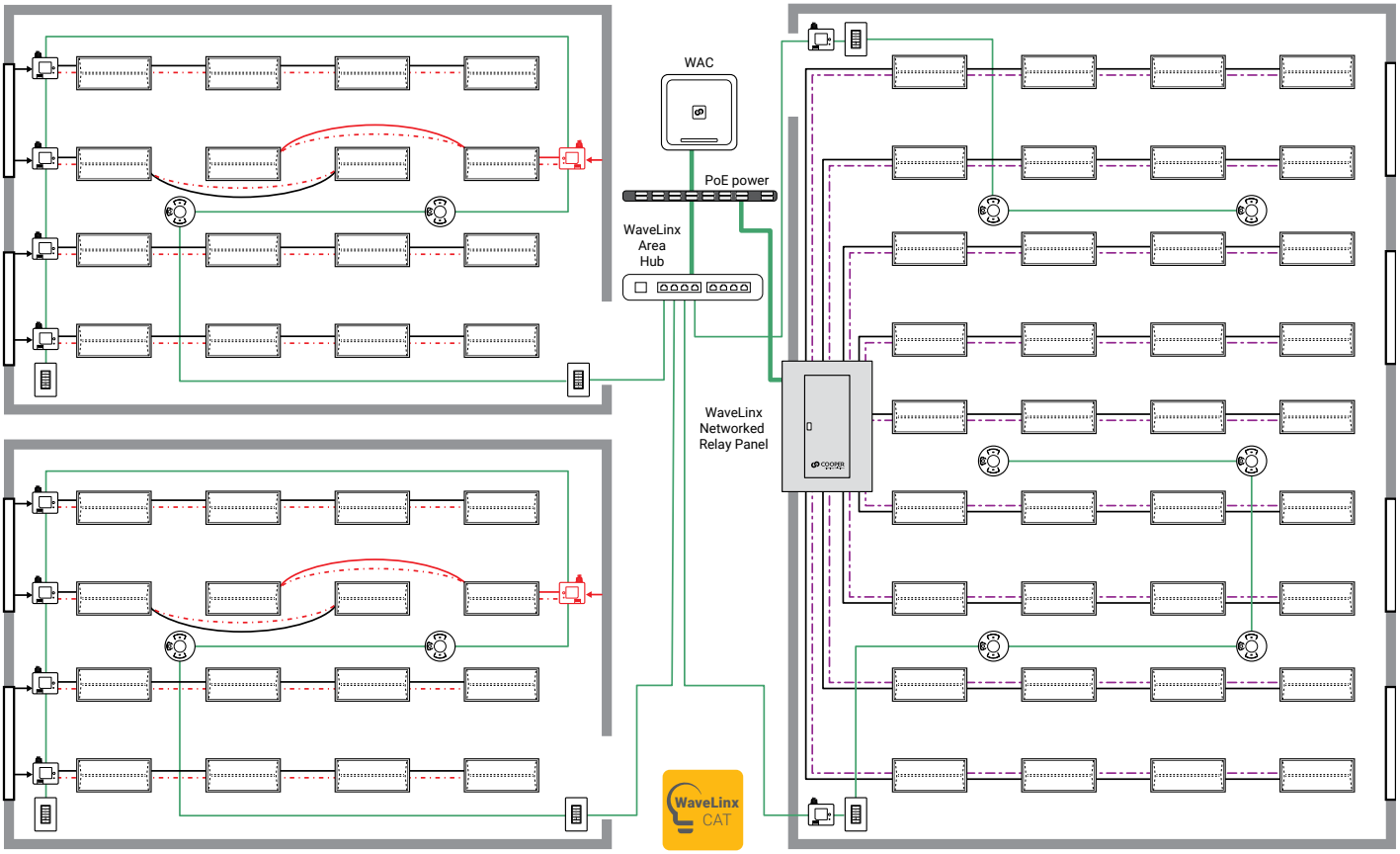

KEY

- CAT5 cable
- Dimming wires
- Line voltage
- WaveLinx PRO (IEEE 802.15.4)

For large spaces or spaces WaveLinx offers the WaveLinx Area Controller which communicates with Networked Panel, PRO and CAT devices.

WaveLinx Area Controllers connect with CAT devices through a WaveLinx Area Hub, and interface with Networked Panel via an IP network.

WaveLinx Area Controller allows you to scale to multiple rooms on an entire floor. WaveLinx CAT devices connect via CAT5 cable or WaveLinx Relay Panel via IP Network.

Features

- Easy upgrade to network spaces with CAT5 wired connection with the WaveLinx Area Controller
- A hybrid controls solution, with WaveLinx CAT and Panel devices working as one unified system
- Supports up to 8 CAT5 network areas per WaveLinx Area Hub and 150 devices per WaveLinx Area Controller
- One WaveLinx mobile app controls and configures WaveLinx CAT and Panel devices

Service and Support

A WaveLinx system creates incredible value, from the cost savings of occupancy detection to the flexibility and power of scheduled lighting control.

To maximize the return on your lighting system investment, your WaveLinx system must perform at its peak.

We can help. With a network of experienced and skilled control specialists and a national presence, we can help with everything from system design, quote, implementation, and on-going maintenance.

We offer:

Field Project Design Services

Pre-commissioning Support

Field Project Startup

Verification Walkthrough

Optimization Services

Service Plans

Service Plans offer proactive, onsite, and remote diagnostics, configuration changes, training, and software/firmware updates typical of maintaining lighting control systems. Service Plans help facility managers and owners maintain their investment for optimal performance and maximum value.

- Prepaid, budgeted services, with coverage options for planned and unplanned visits.
- Fully customizable to meet your unique requirements
- Optimize your system as your building needs evolve
- Our Service Plans are available in single or multi-year arrangements and are customized to fit your exact needs. Cooper Lighting Solutions has two Service Plans designed to fit your service requirements and budget.

SCAN
for more
Support and Services
information





Support

The services and support team simplifies design and specification. We're committed to supporting your project needs from design to occupancy and beyond.

Technical Support:

Phone:
+1 (800) 553-3879 (24/7 Support)

Email (US):
controltechsupport@cooperlighting.com

COOPER Lighting Solutions

a signify business

Why Cooper Lighting Solutions?

At Cooper Lighting Solutions, we build forward-thinking lighting solutions that make people's lives safer, while making buildings, homes and cities smarter and more sustainable. We deliver an industry-leading portfolio of residential, sports, infrastructure, industrial, and commercial LED lighting; plus lighting controls and smart lighting systems.

We question, we seek, and we solve. Because building a better world means asking tough questions and pushing harder for answers. Together with our customers, we create solutions that build a better world. At Cooper Lighting Solutions, we push past the ordinary to build brighter.

Cooper Lighting Solutions is a business unit of Signify, the world leader in lighting. Together we have a shared purpose to unlock the extraordinary potential of light for brighter lives and a better world.



Lighting Brands
Ametrix
AtLite
Corelite
Ephesus
Fail-Safe
HALO
HALO Commercial
Invue
iO
Iris
Lumark
LumarkAP
Lumière
McGraw-Edison
Metalux
MWS
NeoRay
Portfolio
PrentaLux - 3D Printed Lighting
RSA
Shaper
Streetworks
Sure-Lites

Controls Brands
Greengate
Fifth Light
Intelligent Lighting Controls

Connected Lighting Systems and Smart Spaces Platform
WaveLinx
Trellix Infrastructure

SCAN
for more
WaveLinx CAT
information

COOPER Lighting Solutions
a signify business

Cooper Lighting Solutions
1121 Highway 74 South
Peachtree City, GA 30269
P: 770-486-4800
www.cooperlighting.com

Canada Sales
5925 McLaughlin Road
Mississauga, Ontario L5R 1B8
P: 905-501-3000
F: 905-501-3172

© 2026 Cooper Lighting Solutions
All Rights Reserved
Printed in USA
Publication No. BR50390723
January 2026

Cooper Lighting Solutions is a registered trademark.

All other trademarks are property of their respective owners.

Product availability, specifications, and compliances are subject to change without notice.