Project		**Catalog #**		**Type**	
Prepared by		**Notes**		**Date**	



HALO

LT6 6” Recessed Canless LED Downlights

The LT Baffle Canless LED Downlights provide a modern, regressed downlight for bright, general area lighting.
The 5-color selectability and flicker-free 10% dimming allow for easy lighting customization.

Typical Applications Residential

Interactive Menu

- Order Information page 2
- Product Specifications page 2
- Energy Data page 3
- Photometric Data page 3
- Product Warranty

Product Certification

Refer to ENERGY STAR® Certified Products List.
Can be used to comply with California Title 24 High Efficacy requirements.
Certified to California Appliance Efficiency Database under JA8.

Product Features

Top Product Features

- Round 6” Canless LED Downlight suitable for remodel and new construction installations (For new construction, use with canless mounting frames/plates)
- Installs in [2x4] framing and rated for IC (insulation contact) or non-IC applications (no housing required)
- **Lens & Trim:** Recessed baffle trim, flat diffuse lens
- **5-Color Field-SeleCCTable:** 2700K, 3000K, 3500K, 4000K, 5000K; 90+ CRI
- **Brightness:** 750 lumens (nominal)
- **Dimming:** Dims to 10% (phase cut LE/TE); 120V input
- Smooth Decorative Overlays in 2 finishes (sold separately)
- Meets AIR-TITE and code compliance for additional energy savings
- **Life:** 35,000 hrs of maintenance-free operation in damp or wet locations
- 5-year warranty

Dimensional and Mounting Details

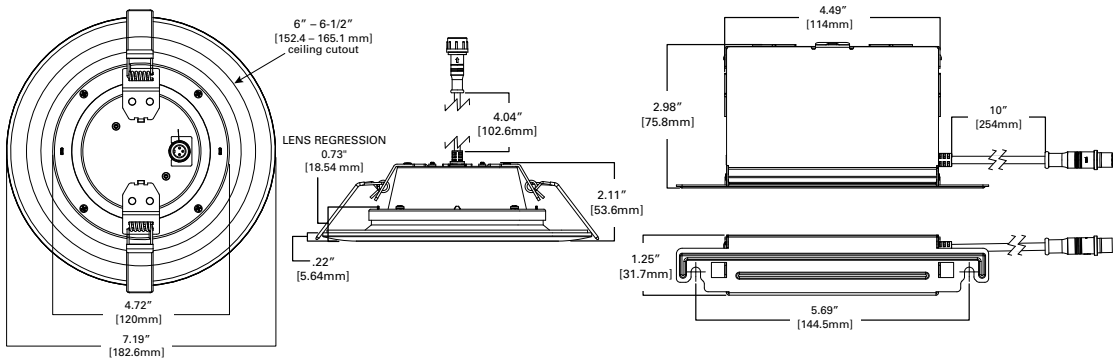

Order Information

Individual

Catalog Number	Module	Lumens (@3000K)	CRI/CCT	Driver	Finish	Packaging
LTC608FS5B	6-inch LT Series Baffle Canless LED Downlight	795 lumens	90+ CRI, field selectable CCT: 2700K,3000K, 3500K, 4000K, 5000K	120V 60Hz, LE & TE phase cut 10% dimming	Matte White	Plastic-free & Fully Recyclable
LTC608FS5BMB	6-inch LT Series Baffle Canless LED Downlight	855 lumens	90+ CRI, field selectable CCT: 2700K,3000K, 3500K, 4000K, 5000K	120V 60Hz, LE & TE phase cut 10% dimming	Matte Black	Plastic-free & Fully Recyclable

Optional Accessories - Decorative Smooth Splay Overlays (order separately)

Catalog Number	Description
LT6OMW	6-inch matte white decorative smooth splay overlay
LT6OMB	6-inch matte black decorative smooth splay overlay



LT6OMW

Paintable Matte White, Smooth Splay



LT6OMB

Matte Black, Smooth Splay

Accessories – Fixture-to-Junction Box Extension Cable (order separately)

Use HALO Canless Extension Cables (plenum rated) in applications where junction boxes need to be installed further away from the fixture – either for convenience or to save on line-voltage wire. (Co-locating junction boxes makes adjustments and maintenance fast and easy.)

Catalog Number	Description
HLB06EC	6-ft. extension cable
HLB12EC	12-ft. extension cable
HLB20EC	20-ft. extension cable

Accessories – Mounting Frames (order separately)

Catalog Number	Description
MF6RC	6” Round Mounting Frame with 1/2” Drywall collar
HL6RSMF	6’ Round/Square New Construction Mounting Frame
SP346RS	3”/4”/6” Round/Square Smash Plate

Optional Accessories - Oversized “Goof” Ring Accessory (sold separately)

Catalog Number	Description
OT400P	Metal ring with 5.875” ID opening, 9.5” OD flange, matte white
OT403P	Metal ring with 6” ID opening, 8” OD flange, matte white
OT450P	Metal ring with 5.5” ID opening, 8” OD flange, matte white

Specification Features

Selectable System
- Use the 5-position color selector switch to choose between: 2700K, 3000K, 3500K, 4000K, and 5000K

Module – Trim
- LED module consists of LED array, optical assembly, driver and self-flanged trim
- Baffle trim (Use a decorative overlay to convert from baffle to smooth splay - order separately)
- Injection molded plastic construction is impact resistant and non-corrosive
- Non-conductive construction meets most local code ‘dead front’ requirements

LED Array
- A plurality of low power LEDs provide a uniform source with high efficiency and long life
- Available in 90 CRI minimum, R9 greater than 50 and color accuracy within 4 SDCM provide color accuracy and uniformity
- Factory default color temperature (CCT) is set to bright white (3000K)
- 5-color selectable CCT: 2700K, 3000K, 3500K, 4000K and 5000K

Optical Assembly
- Optical assembly provides wide distribution useful for general and task lighting
- Diffuse injection molded lens with contoured profile provides uniformity and a familiar lamp like appearance

Driver
- Integral 120V 60 Hz constant current driver provides noise free operation
- Dimmable: Continuous, flicker-free phase cut (leading-edge/trailing-edge - LE/TE) dimming from 100% to 10% output with compatible dimmers
- See this fixture’s Dimming Guide for compatible dimmers

Retention
- No additional housing or junction box required (Not for installation in recessed cans)
- The included remote driver / junction box may be used in direct contact with insulation
- Installer must cut hole and install fixture into aperture with the clips compressed
- When released, the spring clips will rest on the back side of the ceiling material holding the fixture in place
- For new construction applications, use HALO Canless Mounting Frames or Smash Plates prior to drywall installation

Gasket
- Closed cell gaskets achieve restrictive airflow requirements without additional caulking

Compliance
- UL Certified US and Canada Type IC suitable for direct contact with air permeable insulation
- Damp location listed. Not recommended for use in direct contact with spray foam insulation, reference NEMA LSD57-2013
- Airtight certified per ASTM-E283
- EMI/RFI emissions per FCC 47CFR Part 15 consumer limits
- Contains no mercury or lead and RoHS compliant
- Photometric testing in accordance with IES LM-79-08
- Lumen maintenance projections in accordance with IES LM-80-08 and TM-21-11
- Can be used for State of California Title 24 high efficacy luminaire compliance. Complies with Title 24 JA8-2022-E.
- Can be used International Energy Conservation Code (IECC) high efficiency luminaire compliance.
- ENERGY STAR® listed, reference database for current listings

Warranty
- Five year limited warranty, consult website for details. www.cooperlighting.com/legal

Energy Data

LT6 - 750 Lumen

Lumens (nominal)	750
Input Voltage	120V
Input current	0.081A
Input Power	9.3 (W)
Efficiency	79.81 (LPW)
Inrush(A)	1.46A@68usec
THD	15.30%
PF	0.967
T Ambient	-30° - +40°C
Sound Rating	19.3dB @1feet

Photometric Data

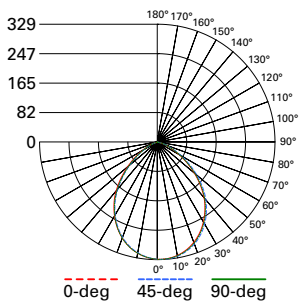

LTC608FS5B-3000K

Spacing Criteria (0/90/45): 1.18/1.18/1.26
Beam Angle: 92.4°
Field Angle: 139.4°
Lumens: 795
Input Watts: 8.8 W
Efficacy: 90.3 LPW
UGR: 21.9
Test Report: P879314

Zonal Lumen	Lumens	% Lumens
0-30	284.5	35.8
0-40	450.3	56.7
0-60	716.7	90.2
0-90	795	100
90-180	0	0
0-180	795	100

TM-30-15	Rf = 92
	Rg = 100
CRI/CIE	Ra = 93
	R9 = 71.6

CCT - Range of 2700K- 5000K

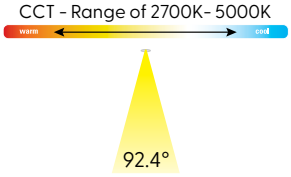

LT6 5CCT				
CCT	Watts	lumens	LPW	CRI
2700K	8.6	750	87.2	92
3000K	8.8	795	90.3	93
3500K	8.8	825	93.8	95
4000K	8.7	835	96.0	95
5000K	8.6	800	93.0	93

LTC608FS5B-3000K

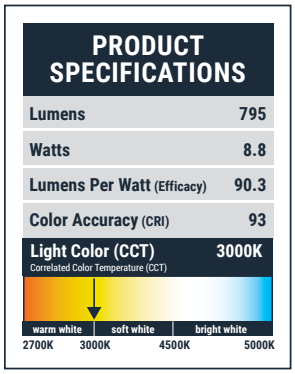

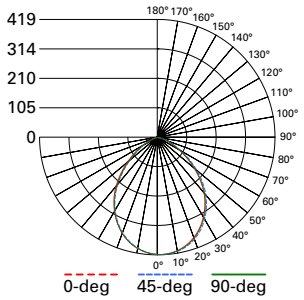

LTC608FS5BMB-3000K

Spacing Criteria (0/90/45): 1.18 / 1.18 / 1.26
Beam Angle: 92°
Field Angle: 136°
Lumens: 855.5
Input Watts: 8.8 W
Efficacy: 97.2 LPW
UGR: 21.8
Test Report: P995475

Zonal Lumen	Lumens	% Lumens
0-30	315.5	36.9
0-40	499.9	58.4
0-60	789	92.2
0-90	855.5	100
90-180	0	0
0-180	855.5	100

TM-30-15	Rf = 91.6
	Rg = 102.1
CRI/CIE	Ra = 95.5
	R9 = 73.2

CCT - Range of 2700K- 5000K

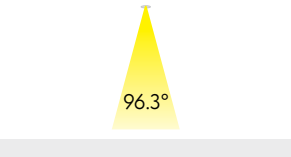

LT6 5CCT				
CCT	Watts	lumens	LPW	CRI
2700K	8.6	800	87.2	92
3000K	8.8	855	97.2	93
3500K	8.8	885	100.6	93
4000K	8.8	890	101.1	93
5000K	8.6	835	97.1	93

LTC608FS5BMB-3000K

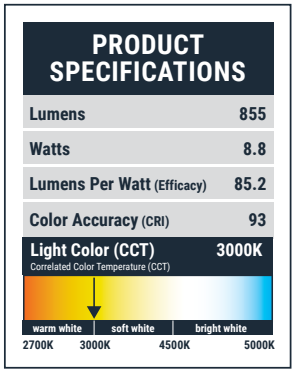

Cooper Lighting Solutions
1121 Highway 74 South
Peachtree City, GA 30269
P: 770-486-4800
www.cooperlighting.com

© 2026 Cooper Lighting Solutions
All Rights Reserved.

Specifications and dimensions subject to change without notice.