INSTALLATION MANUAL
REMOTE POWER SYSTEM: DISTRIBUTION BOX

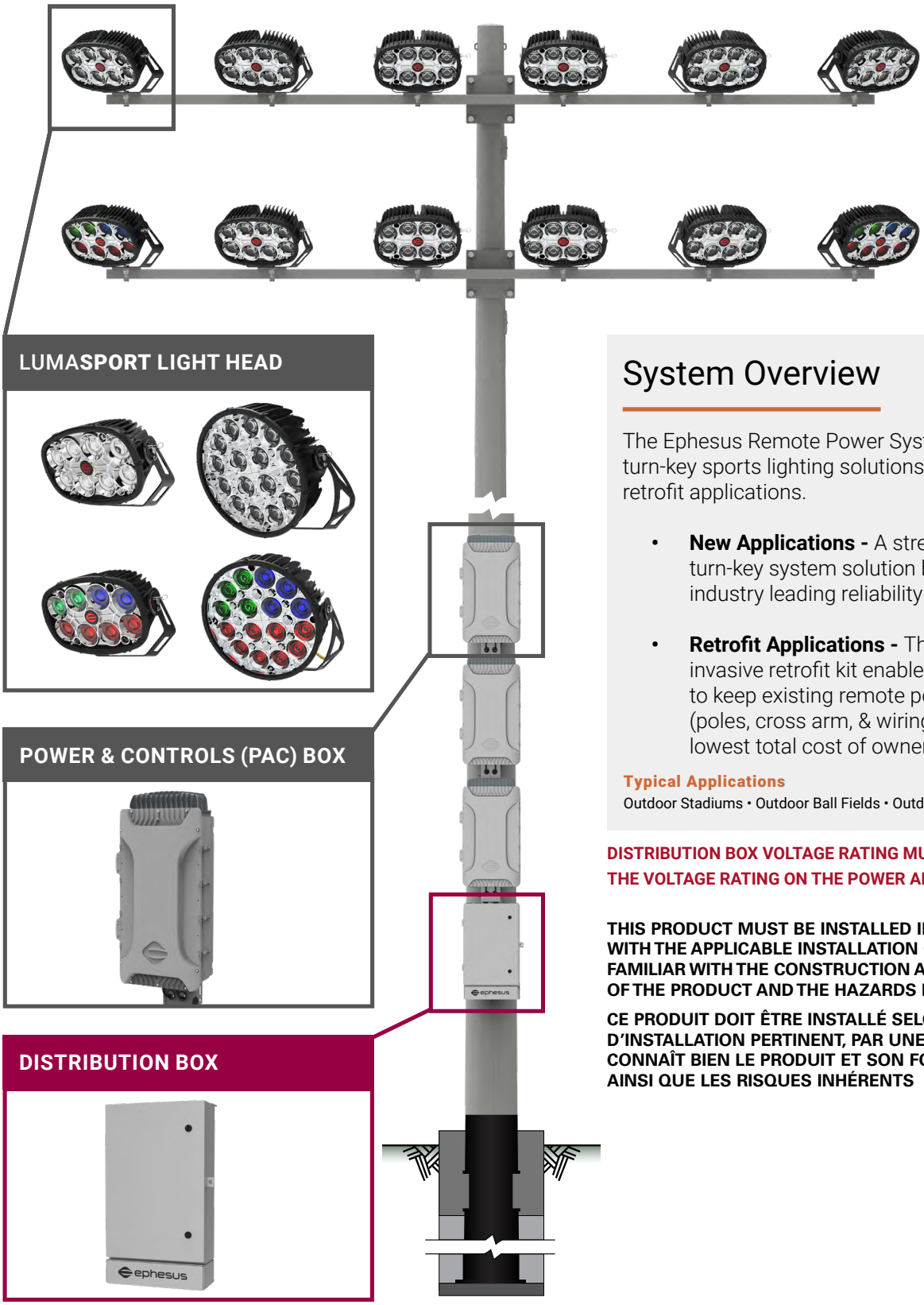

LUMASPORT LIGHT HEAD

POWER & CONTROLS (PAC) BOX

DISTRIBUTION BOX

System Overview

The Ephesus Remote Power System delivers full turn-key sports lighting solutions for both new and retrofit applications.

- **New Applications -** A streamlined full turn-key system solution backed with industry leading reliability and performance.
- **Retrofit Applications -** The minimally invasive retrofit kit enables the opportunity to keep existing remote power infrastructure (poles, cross arm, & wiring) providing the lowest total cost of ownership.

Typical Applications

Outdoor Stadiums • Outdoor Ball Fields • Outdoor Multi-Event Spaces

DISTRIBUTION BOX VOLTAGE RATING MUST MATCH THE VOLTAGE RATING ON THE POWER AND CONTROLS BOX

THIS PRODUCT MUST BE INSTALLED IN ACCORDANCE WITH THE APPLICABLE INSTALLATION CODE BY A PERSON FAMILIAR WITH THE CONSTRUCTION AND OPERATION OF THE PRODUCT AND THE HAZARDS INVOLVED

CE PRODUIT DOIT ÊTRE INSTALLÉ SELON LE CODE D'INSTALLATION PERTINENT, PAR UNE PERSONNE QUI CONNAÎT BIEN LE PRODUIT ET SON FONCTIONNEMENT AINSI QUE LES RISQUES INHÉRENTS

ephesus
SPORTS LIGHTING

EEL-UNV-0723

WARNINGS AND CAUTIONS

Failure to strictly adhere to the warnings and cautions as well as the installation instructions may result in serious personal injury or property damage.

Before You Begin

Read and understand this entire manual and any additional site-specific installation documents before attempting to assemble, install, or operate the luminaire. If you have any questions regarding the product or installation, contact Cooper Lighting Customer Service at 1-800-573-3600. The most up to date version of this installation manual can always be found at ephesuslighting.com.

Follow all warning and cautions outlined here as well as any local safety procedures.

1. All electrical work must conform to National Electrical Code (NFPA 70), IEEE Emerald book, and all applicable local codes and ordinances.
2. Ensure the capacity of the existing power distribution system meets the load requirements for the new installation, including inspection of wiring integrity and confirm the branch circuit voltage matches the voltage of the lighting equipment.
3. See fixture specification sheet for weight and wind loading (EPA) data. Supporting and mounting structures must comply to industry standard capacity requirements and comply with applicable regulatory and safety codes.
4. Electrical distribution systems must comply with all applicable regulatory and safety codes.
5. In harsh settings where the system is subjected to factors such as extreme temperatures, high corrosion, hurricanes, or lightning, always follow local codes and additional protocols to ensure the cabling and other system components can withstand the environmental stress for the life of the system.
6. DO NOT make or alter any open holes in the luminaire. Do not modify the luminaire, internal wiring, or fixture mounting features. Opening or modifying the luminaire or bracket will void the warranty.
7. Use Personal Protective Equipment including hardhats, safety glasses, reflective vests, electrical safety gloves, fall protection equipment, and safety toe boots during installation, operation, and maintenance of luminaire.
8. Verify compliance with local standards to prevent access to the area below where installation activities are occurring to prevent injury from accidental drops of fixtures, tools or hardware.

Storage

Store luminaires in a clean, dry place, protected from dirt, water, and sunlight prior to installation. See Table 1 for required storage and operating conditions:

Storage Temperature	Operating Temperature	Humidity
-40°C to +75°C (-40°F to 167°F)	-40°C to +40°C (-40°F to 104°F)	5% to 95% non-condensing

Table 1. Storage and Operating Conditions

Risk of Fire, Electrical Shock, Cuts or other Casualty Hazards - Installation and maintenance of this product must be performed by a qualified electrician. This product must be installed in accordance with the applicable installation code by a person familiar with the construction and operation of the product and hazards involved.

Risk of Fire and Electric Shock - Make certain power is OFF before starting installation or attempting any maintenance. Disconnect power at fuse or circuit breaker.

Risk of Fire - Refer to product label for specific minimum supply conductor requirements.

Risk of Burn - Disconnect power and allow fixture to cool before handling or servicing.

Risk of Personal Injury - Fixture may become damaged and/or unstable if not installed properly.

DISCLAIMER OF LIABILITY: Cooper Lighting Solutions assumes no liability for damages or losses of any kind that may arise from the improper, careless, or negligent installation, handling or use of this product.

NOTICE: Green ground wire provided in proper location. Do not relocate.

ATTENTION Receiving Department: Note actual fixture description of any shortage or noticeable damage on delivery receipt. File claim for common carrier (LTL) directly with carrier. Claims for concealed damage must be filed within 15 days of delivery. All damaged material; complete with original packing must be retained.

APPLICATIONS: This lighting fixture should not be used in area of limited ventilation or inside high ambient temperature enclosures. It must be stored in a dry location before installation. Do not expose lighting fixture to rain, dust or other environmental conditions prior to installation. Best results will be obtained if installed and maintained according to the following recommendations.

Power Supply

Ephesus LED light heads are not traditional metal halide lights; they are high-tech, new-generation solid-sate devices. To protect your valuable investment, ensure the the supply of electrical power is clean and stable with no spikes or sags.

The power transformer feeding the site electrical distribution system must be a three-phase, four-wire wye configuration or a single-phase configuration. An ungrounded delta configuration is **NOT** an approved power supply. If any other supply transformer configuration is present, notify Cooper Lighting before proceeding with installation.

All issues with supply power must be corrected before light heads are installed. Failure to use an approved supply power configuration may result in equipment damage.

	QUANTITY OF FIXTURES PER POLE																							
LUMASPORT 8	1	2	3	4	5	6	7	8	9	10	11	12	13	14	15	16	17	18	19	20	21	22	23	24
QUANTITY OF PAC BOXES	1 PAC BOX				2 PAC BOXES				3 PAC BOXES				4 PAC BOXES				5 PAC BOXES				6 PAC BOXES*			
QUANTITY OF DISTRIBUTION BOXES	1 DISTRIBUTION BOX																							

	QUANTITY OF FIXTURES PER POLE											
LUMASPORT 16	1	2	3	4	5	6	7	8	9	10	11	12
QUANTITY OF PAC BOXES	1 PAC BOX		2 PAC BOXES		3 PAC BOXES		4 PAC BOXES		5 PAC BOXES		6 PAC BOXES*	
QUANTITY OF DISTRIBUTION BOXES	1 DISTRIBUTION BOX											

	QUANTITY OF FIXTURES PER POLE					
LUMASPORT 8 PRISM & LUMASPORT 16 PRISM	1	2	3	4	5	6
QUANTITY OF PAC BOXES	1 PAC BOX		2 PAC BOXES		3 PAC BOXES	
QUANTITY OF DISTRIBUTION BOXES	1 DISTRIBUTION BOX					

Note: 1 qty. Distribution Box can support 6 qty. standard white PAC Boxes or 3 qty PRISM PAC boxes..
*use (-XL)

Power Quality

Follow proper grounding methods. The electrical system must be properly grounded for power electronics in accordance with IEEE Emerald Book, including using equipment grounding conductors. Metallic conduits are **NOT** an acceptable grounding method for Cooper Lighting LED lighting systems. Power must also be phase balanced. If you are not sure if your power system is grounded or load balanced, **DO NOT** install the luminaire and contact a licensed electrician for information on proper grounding and balancing methods as required by the National Electrical Code and IEEE standards.

Surge Protection

Installation of surge protection is recommended in power distribution systems that feed LED sports lighting. Failure to protect electrical circuits from surges may result in damage to fixtures.

Branch Circuits

Branch power circuits feeding luminaires shall have a measured voltage of within 3% of nominal voltage with no sags, swells, or transients. When circuiting power to luminaires, load balance all circuits. See fixture specification sheet for power characteristic data.

Voltage Configuration

Before installing luminaires, verify that the fixture model number has the correct voltage configuration for your application. See fixture specification sheet for acceptable branch circuit voltage. Failure to confirm proper configuration may result in injury damage to fixtures.

WARNING Failure to confirm proper configuration may result in injury or fixture damage.

IF YOU NEED CUSTOM SYSTEM COMPONENTS OR SERVICES PLEASE CONTACT EPHESUS:

WWW.COOPERLIGHTING.COM/GLOBAL/CONTACT-US/EPHESUS

- POLES
- CROSS ARMS
- DROP CABLES
- FOUNDATION DESIGN
- LIGHTING DESIGN

Required Tools and Materials	• 3/16in Allen driver • 9/16in Socket w/ driver • 27mm cord grip tool • 1/4" socket with driver or flat head screw driver • Large flat head screw driver • Medium Flathead or Phillips screwdriver • Small flat head screw driver • 4mm allen driver • 5/16" socket with driver • 3/8" socket with driver or flathead screw driver • Insulated ferrules sized for 14AWG wire (IEC V-K & UL: class 5/6) • Wire strippers • Diagonal cutting pliers
Optional Tools and Materials	• Cable jacket cutters • Banding Kit (if required) • heavy duty metal shears (if required) • 1-1/4" Conduit, conduit fittings and associated tools (optional) • Insulated Multi-Tap Connectors sized for conductor and current range (if required) Recommended for 3-3/0 AWG: (PBTD-3-3/0 Nimbus Insulated Aluminum Multi-Tap Connector, Conductor Range 3/0-6, 3 Ports, Dual Sided Entry, Tin Plated, UL, CSA) • Cable ties and or Tape

Distribution Box Overview

The Distribution Box serves multiple purposes in the Ephesus Remote Power System.

- AC distribution from the main feed out to all PAC Boxes.
- System level surge protection
- System grounding
- DC splice connections between the PAC Boxes and Light Heads
- Environmental protection for all electrical power connections

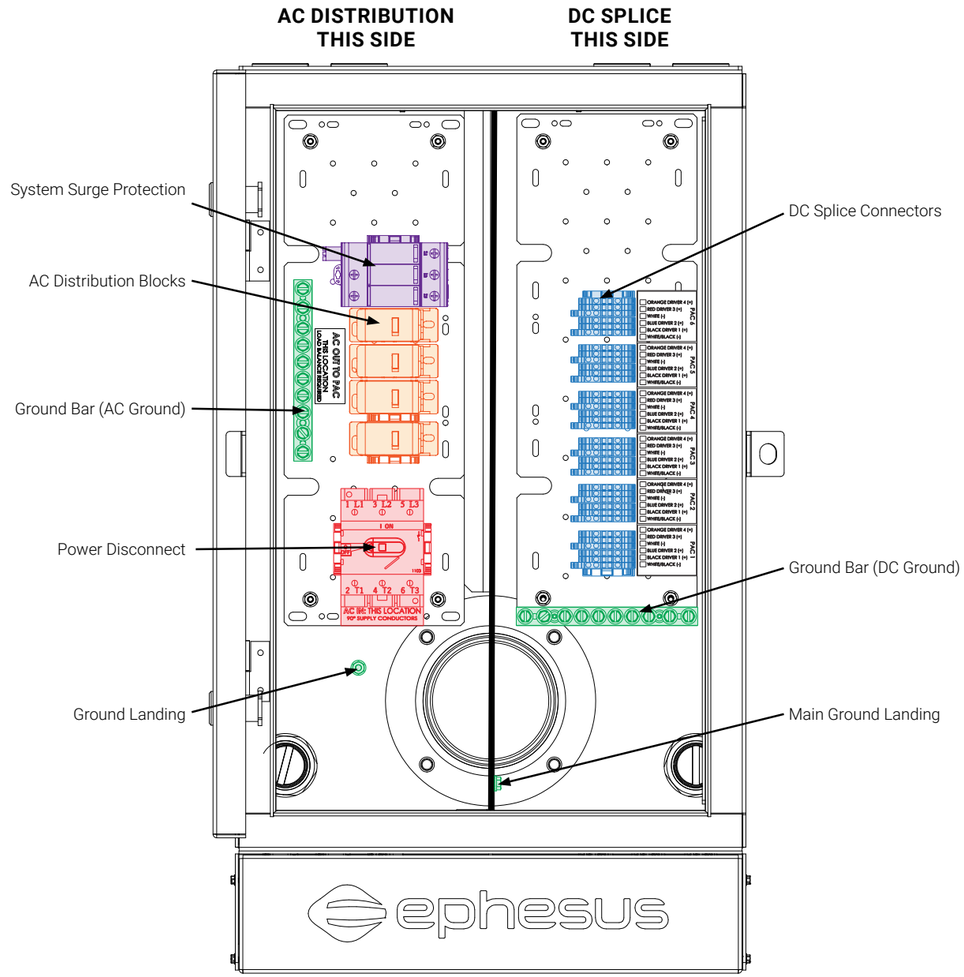

Distribution Box Specifications

Product	Input Voltage	Phase	Max Input Current	Max Surge Rating	Input Wire Gauge	Output Wire Gauge
EPH-DST-6PCWHT	208-480 V	Single Phase or 3 Phase	100A	50 kA	8-1/0 AWG	18-12 AWG

Proper planning will ensure the best results for your sports lighting project. Once these steps are completed, then proceed to the PAC Box installation.

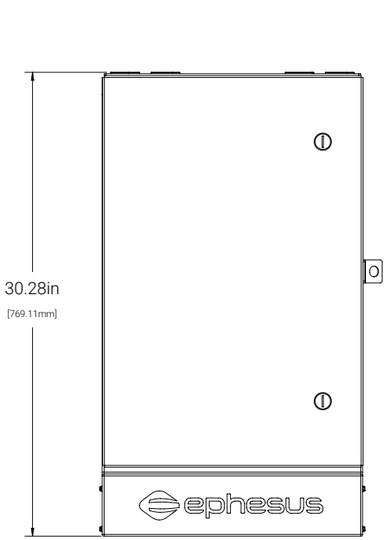

HEAD ON

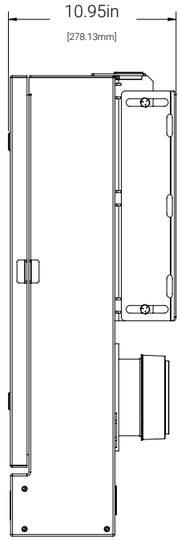

LEFT PROFILE

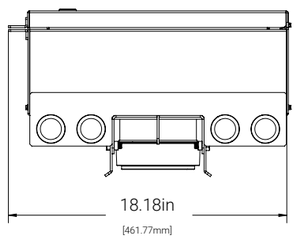

TOP

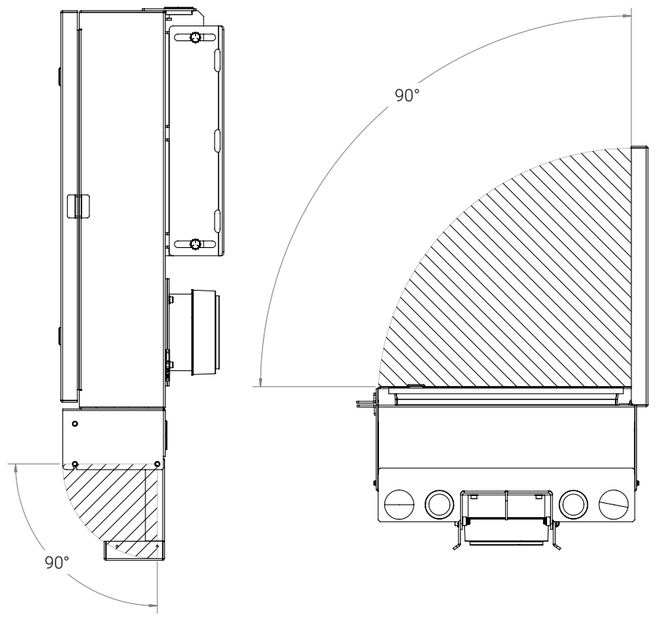

PREPARE THE EXISTING STRUCTURE

Always turn all fixture power sources OFF before performing any work.



WARNING

Failure to disconnect all power sources may lead to damage, injury, or death.

Inspection of the existing structure

Design and condition of crossarms and existing structure shall be evaluated to determine compliance with the EPA and weight requirements needed. Potential interference between the crossarm or platforms and the Light Head shall be evaluated prior to installation. Cooper lighting is not responsible for the existing structure.

Electrical configuration shall be evaluated for compatibility with the Ephesus remote system. If existing wires are re-used, wiring and electrical connections shall be inspected for degradation, abrasion or any other defects that could lead to failure. Any wires or cabling exposed to the weather (external to the crossarm, poles or conduit) shall always be replaced. Cooper lighting is not responsible for the existing wiring. Ensure all circuits are balanced

Electrical Wiring

The existing structure shall have a dedicated ground path between all Light Heads and the Ephesus Distribution Box. The remote configuration requires two adequately rated direct wire runs between each Light Head and Distribution Box. The wiring between Light Head and Distribution Box must be 14AWG, 600V, 90C rated and compliant with all local, state and federal electrical regulatory codes. Cable lengths between all Light Heads and Distribution Box must be less than 200ft.

Map the new and existing fixtures (Retrofit)

In retrofit applications, the existing ballast enclosures and Light Heads will need to be removed. Do not discard of any existing equipment during a retrofit until after the full installation of the new Ephesus system is complete. Markings, hardware, and connectors may assist in during the retrofit process. Any information mapping the Light Head location to the Distribution Box shall be recorded and saved for future use. This is required to link Light Head location and the remotely located power and control components.

Note: For retrofit applications, Cooper Lighting recommends recording mapping information in a prominent document and labeling or otherwise marking the existing fixture number on the bracket or mounting structure to facilitate future identification from the working area.

PREPARE THE DISTRIBUTION BOX

Note: All Distribution Boxes that have the exact same model number are functionally identical as built from the factory.

Cover Plate

The Distribution Box is factory shipped with a port adapter and weatherproof gasket. This adapter is designed to mate with a 4" diameter pipe protruding from the pole and allows electrical power access in and out of the pole. Not all poles have this 4" pipe. In the case where there is no 4"pipe, the flat cover plate proved with the Distribution Box is used. Additional holes sized for 1-1/4" conduit fittings provide an alternative method for access into and out of the pole. The cover plate is located inside the distribution box. Refer to section "Opening the Enclosure"

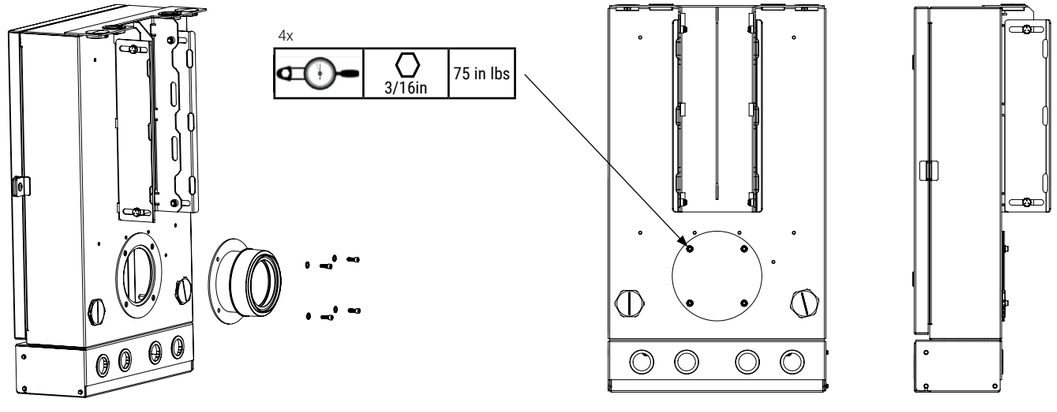

To install the cover plate plate, first remove the 4X ¼" -20 screws that secure the port adapter to the enclosure. Remove the port adapter, making sure not to damage the interface gasket. Place the cover plate over the open hole and replace the 4X screws. Torque the screws as specified.

Adjusting or removing the rail slides

The rails on the back of the Distribution Box have adjustable slides that allow proper fitment on different diameter poles. For most sports lighting poles and flat surfaces, the slides can be adjusted after placement on the pole. If the pole diameter is very small, the slides can be inverted for proper fitment on the pole. To do this, remove the 4 bolts securing the slides. Flip the slides over so the bent flanges face inward instead of outward. Replace the bolts and torque to 20 ft lbs so the slides are secure. Final adjustment may be required after mounting.

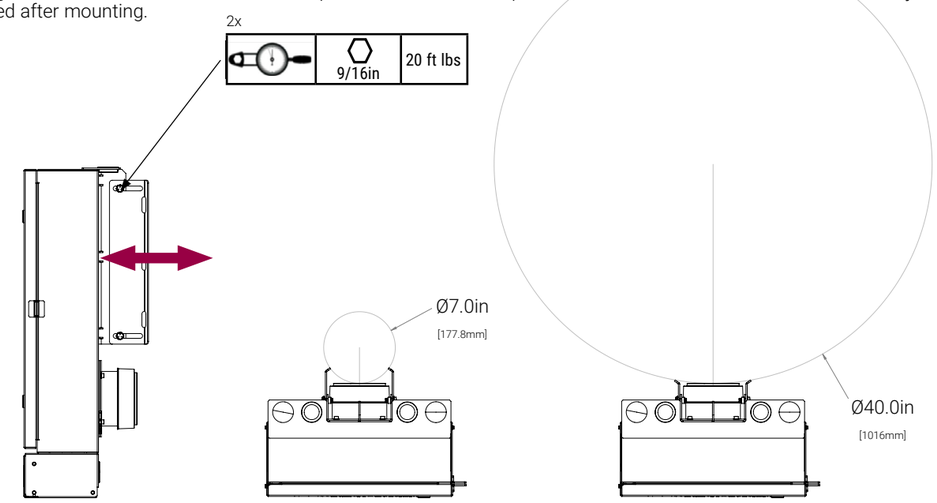

For new construction or if the Distribution Box is going to be directly bolted to the mounting surface, the slides will need to be completely removed. To remove the slides, remove the 4 bolts securing the slides. Be sure to save the bolts in order to attach the Distribution Box.

INSTALLING THE DISTRIBUTION BOX

The Distribution Box is designed to be bolted or banded to the pole or mounting structure. The rails on the back side of the Distribution Box are used to mechanically attach the Distribution Box to the mounting structure as well as provide an electrical wireway for the AC and DC cabling.

Note: For retrofit applications, it is recommended that the Distribution Box is installed prior to the mounting rails and PAC Boxes to assure proper pole access and wire routing. In new construction, the Distribution Box can be installed after the PAC boxes are installed and the AC and DC cables are routed through the mounting rails.

The Distribution Box must always be positioned with the false bottom and weep holes pointed down.

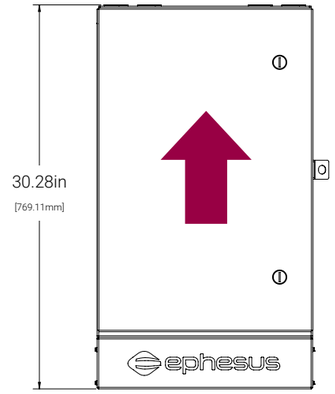

Failure to install the Distribution Box upright will not allow proper water drainage and will void the warranty.

Aligning the port adapter

Note: If there is no 4" Port, the port adapter must be replaced with the cover plate, skip to the mounting section.

Note: Any wires (AC Mains and Drop cables) protruding through the mating pipe should be pulled into the pole to facilitate installation.

Note: Any wires coming up from the base of the poles can be secured through a nearby hand access hole to keep them from falling down the pole.

To install the Distribution Box, slide the 4 inch port adapter around the pipe protruding out of the pole until the gasket makes a full seal around the entire pipe.

Failure to verify the gasket is undamaged and fully sealed on the pipe could lead to a bad weatherproof seal

Push the Distribution Box all the way up against the pole until the rails make complete contact with the mating surface.

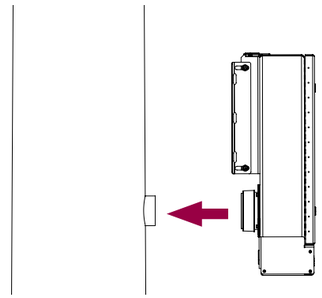

BOLTING THE DISTRIBUTION BOX (NEW CONSTRUCTION)

Note: the rail slides should be removed.

For new construction or if the Distribution Box will be bolted, no banding is required. four mounting bolt assemblies are used to secure the Distribution Box to the pole or mounting structure. The bolts are passed through the mounting tabs and threaded into nuts on the Distribution Box. The four mounting bolts shall be torqued to 20 ft lbs.

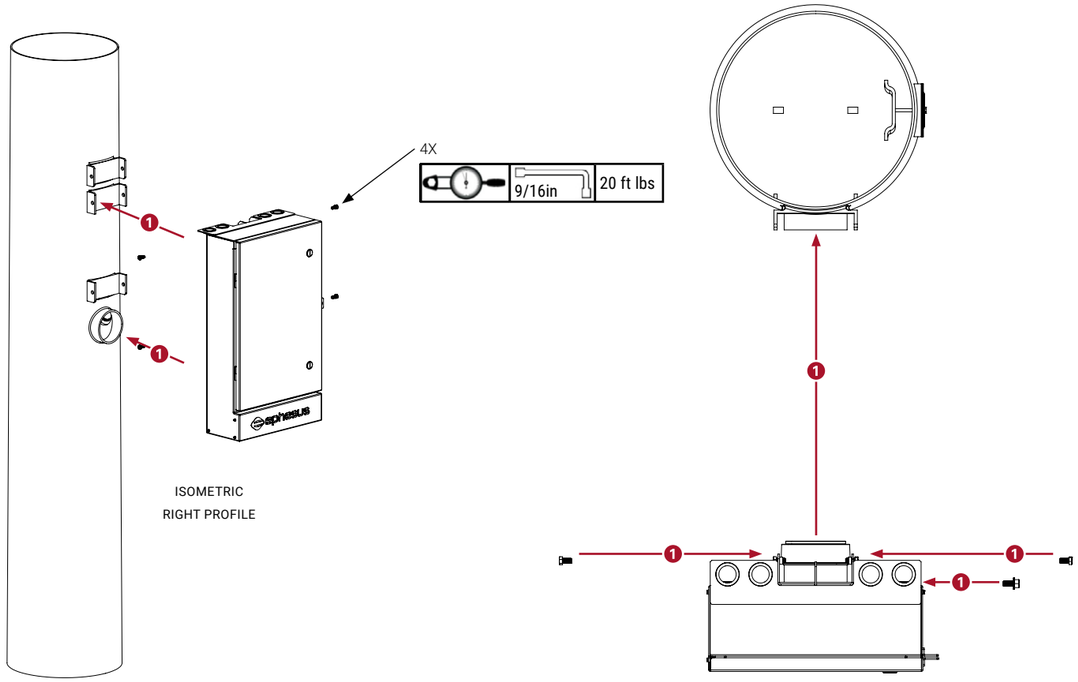

ISOMETRIC

RIGHT PROFILE

TOP

BANDING THE DISTRIBUTION BOX (RETROFIT)

To band the Distribution Box, you will need heavy duty stainless steel banding, stainless steel banding buckles, a banding tensioning tool, and metal shears. The banding must be heavy duty, 3/4 inch X .030 inch thick, stainless steel banding at a minimum. The Ephesus banding kit will include banding, buckles and a banding tensioning tool. Additional banding and buckles may be needed based on the quantity of poles and quantity of installed fixtures.

Note: The heavy duty banding is very strong. Two handed high tensile steel strap cutters can facilitate cutting the strap if available.

The cut ends of the banding can have very sharp edges. Gloves must always be worn during banding installation.

Attach the Distribution Box

The Ephesus supplied banding comes in 100ft roles and the Buckles come in 100 count packs. Two banding straps and two buckles are required to attach each Distribution Box to a pole or structure.

Note: 2 individual bands are required per Distribution Boxes even when they are located on multiple sides of a pole. The Distribution Box allows for multiple bands to passed through the banding slots.

The banding cut length can be determined by adding 30% to the circumference of the pole. The circumference of the pole can be directly measured or calculated if the pole diameter is known.

Banding Cut Length (ft) = Pole Circumference (ft) * 1.3

Total Banding Length Per Distribution Box (ft) = (Banding cut length (ft) X 2)

Buckle qty. per Distribution Box = 2

Refer to the PAC Box installation manual for instructions on how to calculate the amount of banding and buckles required per pole or project. When banding the Distribution Box and PAC Box to a Pole, attach the Distribution Box first to align with the PAC Box Mounting Rail for easier routing of AC and DC cables from the PAC Box to the Distribution Box.

Note: It is always recommended to have extra banding rolls and buckles onsite.

Banding the Distribution Box

During the installation processes, it is easiest to temporarily attach the Distribution Box with straps or cable ties.

Prepare the banding by sliding one end through the buckle starting on the side with teeth on the buckle and leaving about 2 inches exposed past the ears on the buckle. Bend the 2" end down under the buckle. This end will be compressed between the pole or mounting structure and the buckle when tensioned. Once the rail is positioned on the pole, the opposite end of the banding can be inserted through the banding slots on each side of the mounting rail, around the object being banded and then again through the buckle.

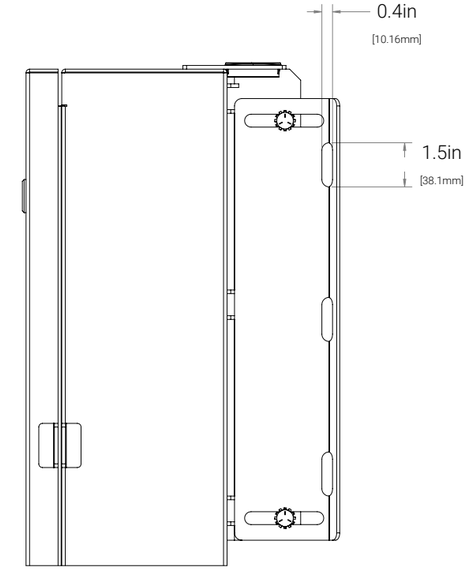

Make sure the clamping jaws are positioned all the way to the tip of the banding tool and the banding cutter is in the open position prior to inserting the banding. Place the free end of the banding into slot at the tip of the banding tensioning tool and then through the clamping jaws of the tensioning tool.

Pull all the slack in the banding through the tool until all the loose slack is removed and the tool sits flush against the buckle.

the buckle shall be positioned away from the mounting rail so when it is tensioned, it sits flush against the pole or mounting structure.

Turn the crank clockwise to begin tensioning the banding. Continue tensioning the banding until the banding is tight and the banding stops sliding through the buckle when the handle is turned. Roll the banding tool over the end of the buckle while turning the crank counterclockwise.

failure to loosen tension while rolling the banding over the buckle can cause the banding to yield or break during installation.

Once the banding is rolled past 90 degrees out from the buckle, the banding should be locked from loosening when the banding is cut. To remove the banding tensioning tool, pull the banding cutter lever to cut the banding. Bend the banding stub the remaining 180 degrees back so it sits flush against the buckle. With a hammer, bend the buckle ears over the banding so it locks it in place

Note: Sometimes it is easier to bend the ears with pliers prior to hammering them flush.

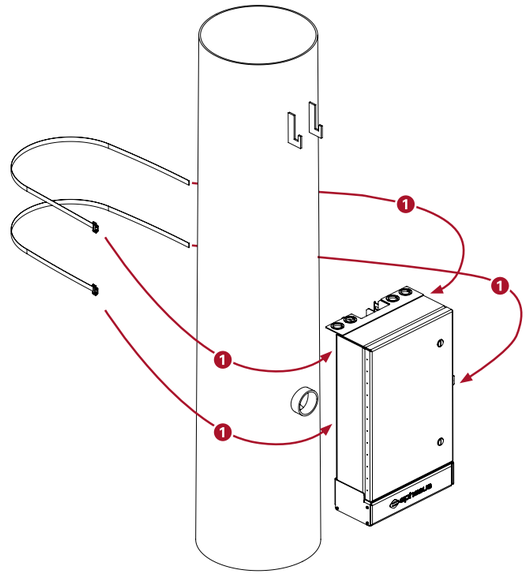

ISOMETRIC

RIGHT PROFILE

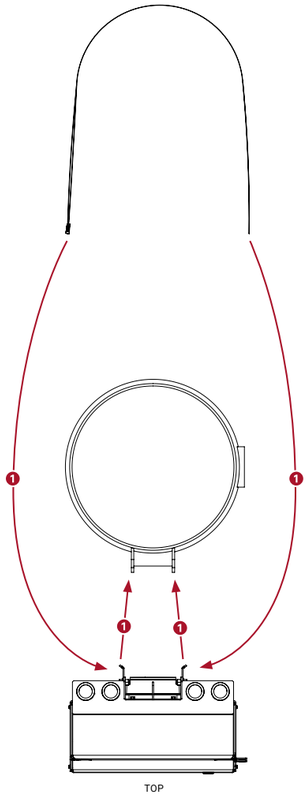

TOP

Repeat this step 2 more times or a total of three bands per rail to fully secure the mounting rail. Be sure to remove any tape or cable ties that were used as a temporary securement method.

OPENING THE ENCLOSURE

WARNING

The Distribution Box main door should never be open when powered.

Main Door

The main door on the Distribution Box has two ¼ turn locks requiring tooled entry. To open the door, use a large flat head screw to turn both locks 90 degrees counter clockwise.

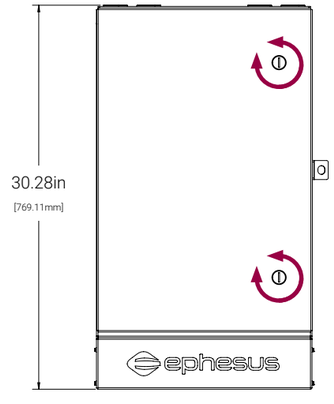

The door does not rotate beyond 90 degrees. Over extension of the door could cause the hinges to break.

Note: If the door needs to be opened beyond 90 degrees, the door can be completely removed by raising it out of the hinges. During re-assembly, be sure to re-attach the ground lug.

False Bottom

To route the cables to and from the PAC Box, the false bottom must be opened. The false bottom is secured by 3x #8 screws with a 1/4" socket. To open the false bottom, remove the top two screws on each side. Next, loosen the two bottom screws on each side but do not back them all the way out. The false bottom will rotate downward.

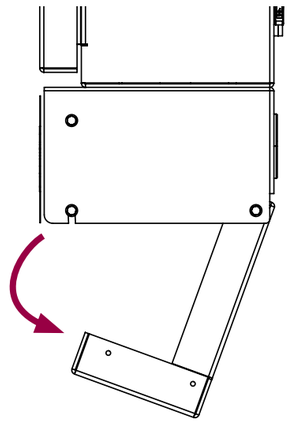

ELECTRICAL CONNECTIONS

Electrical System Layout

The Distribution Box manages the AC and DC electrical path for up to 6 qty PAC Boxes through the entire Remote Power System. The wiring can be separated into five main routes: (refer to page 3 to see quantity of fixtures per pole)

1. AC Mains into system
2. AC Distribution to all PAC Boxes
3. DC in from all PAC Boxes
4. DC out to all Light Heads
5. Ground Path

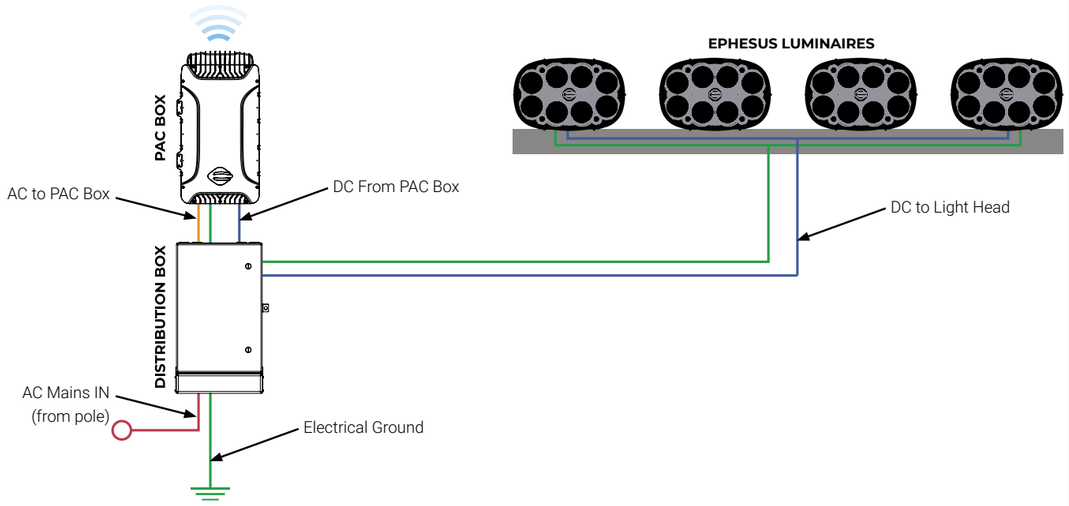

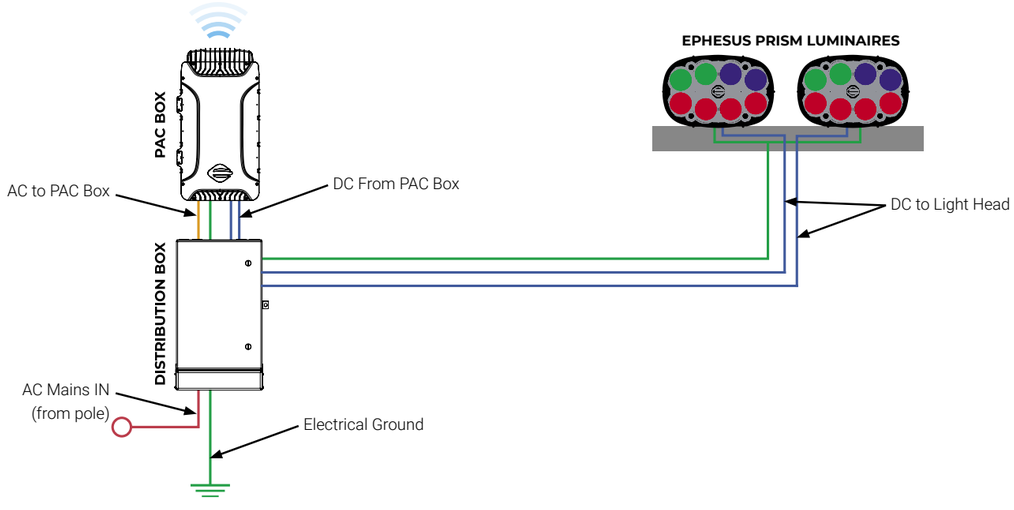

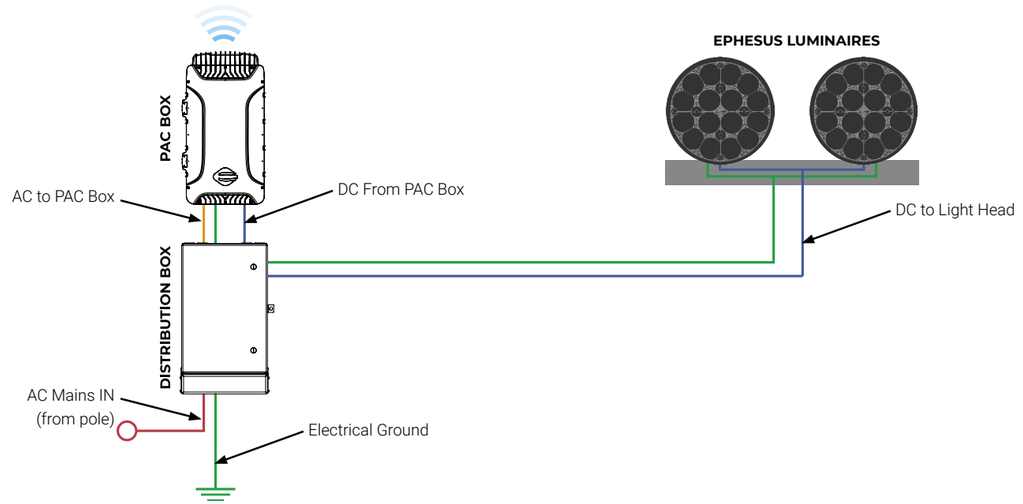

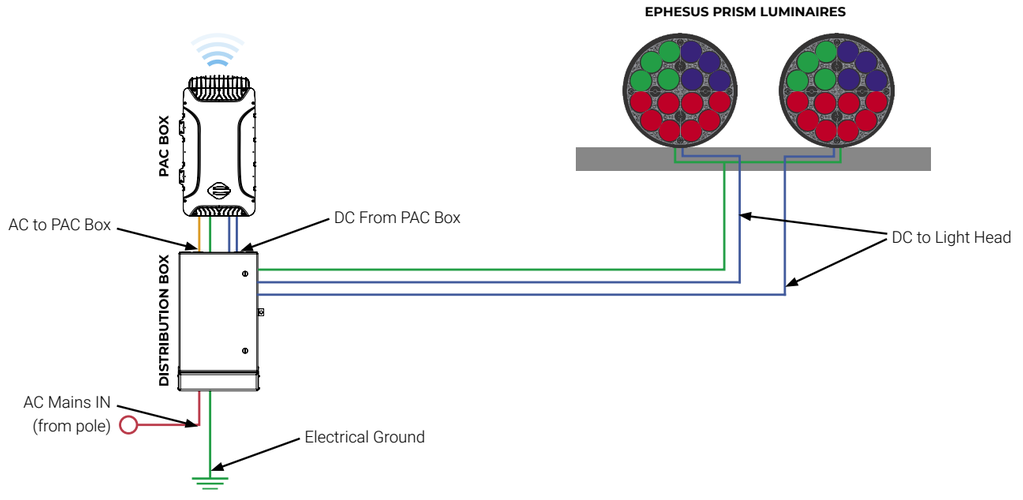

The Distribution Box is split into an AC half and a DC half. Each of the main electrical routes has a dedicated landing location within the Distribution Box.

The landing locations for the AC IN and AC distribution out to the PAC Boxes are all located on the left side of the enclosure. The splice connections between DC in from the PAC Boxes and DC out to the Light Heads are all located on the right side of the enclosure.

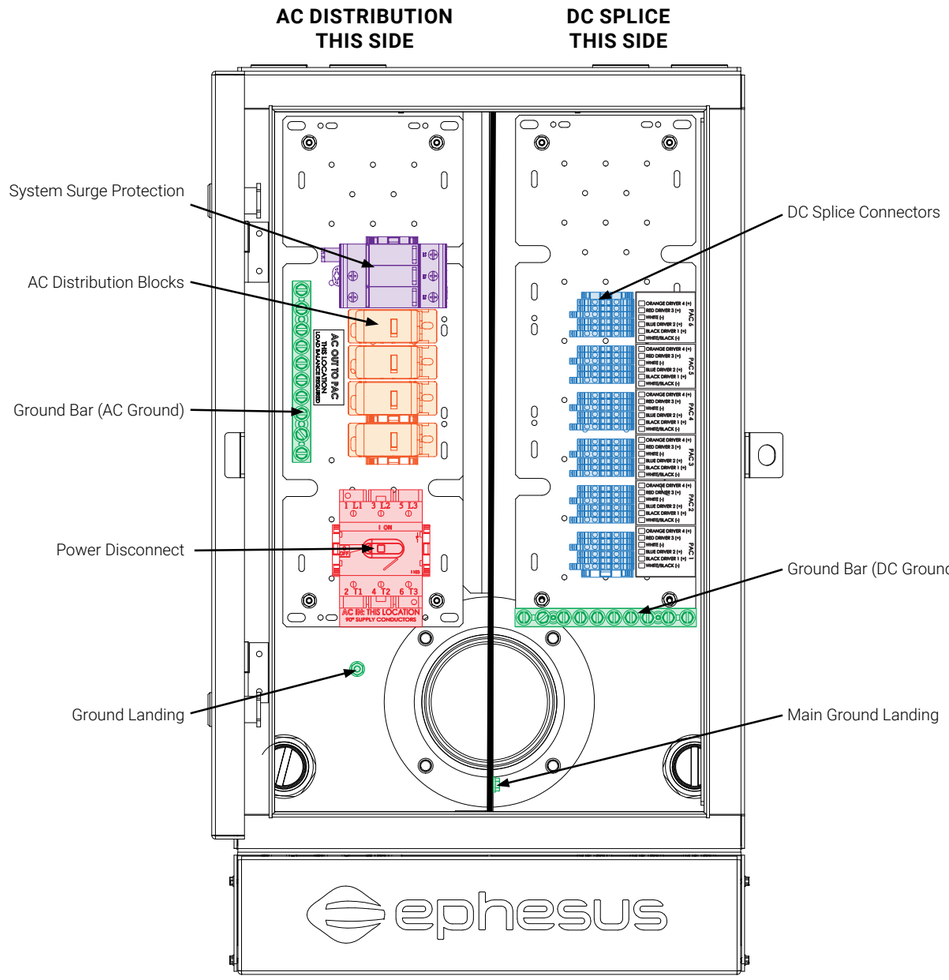

AC IN

The Distribution Box has different wiring configurations. There is a specific surge protection for different input supply voltages. Before the Distribution Box is wired, verify that the AC input voltage matches the voltage marked on the Distribution Box.

AC mains can be routed into the Distribution Box through the port adapter or through 1-1/4 inch conduit. If the port adapter is used, the AC mains can be pulled directly through the port. If conduit is used, remove the 1-1/4" threaded plug on the left side of the enclosure. Install the conduit and conduit fittings per the manufacture's specifications. All incoming AC wires must be complaint with all regulatory requirements and adequately rated for the voltage and combined current for all PAC Boxes that the Distribution Box will support. Make sure all connected AC loads are balanced.

Note: all conduit and conduit fittings must be supplied by the contractor. Contractor may add 30A inline fuse for each PAC. Up to 4 pole circuit breaker with rating equivalent to 1.25 x per phase current.

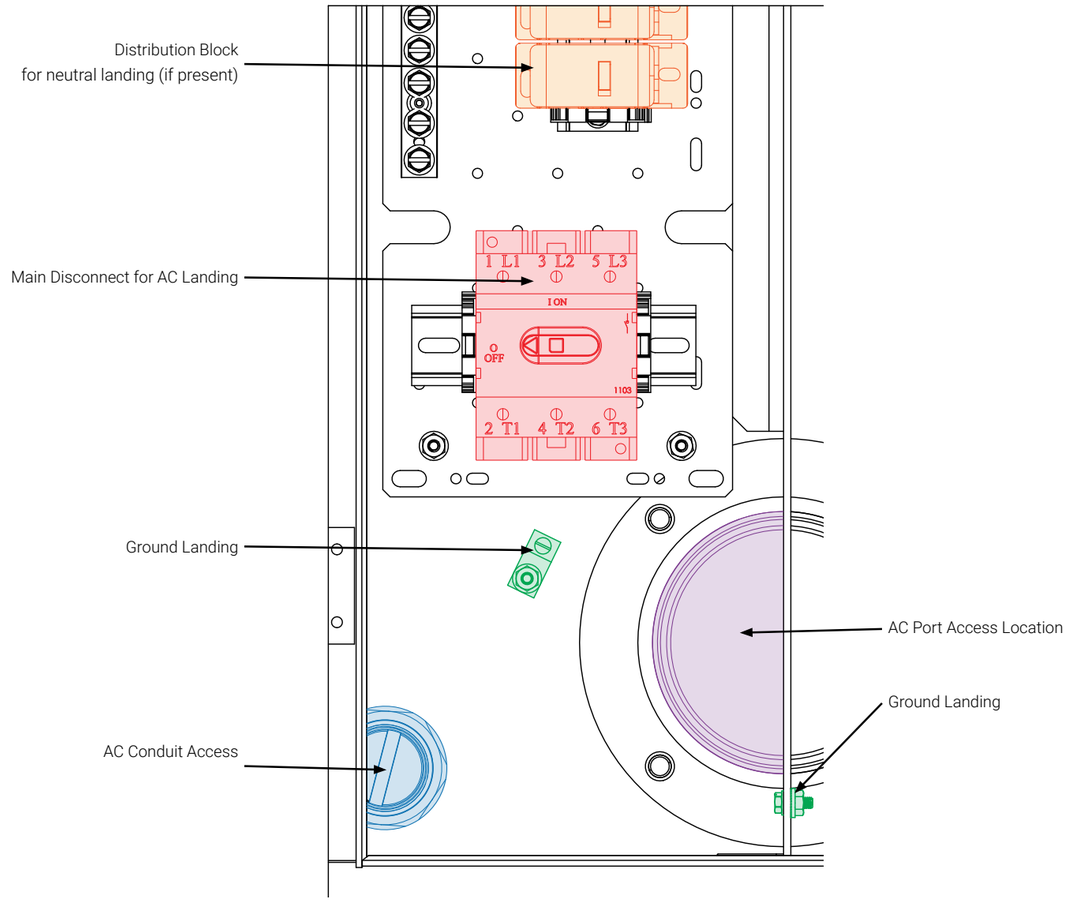

Earth ground should be landed on one of the dedicated ground locations identified with a ground label. The wiring for AC IN will be voltage dependent. Only the electrical configurations listed are acceptable with a total current of 55 amps max.

Failure to configure the Distribution Box to the stated surge rating and the PAC Box rating can damage the components and will void the warranty

120VAC Y TRANSFORMER (3 PHASE) - 208VAC TO PAC Box

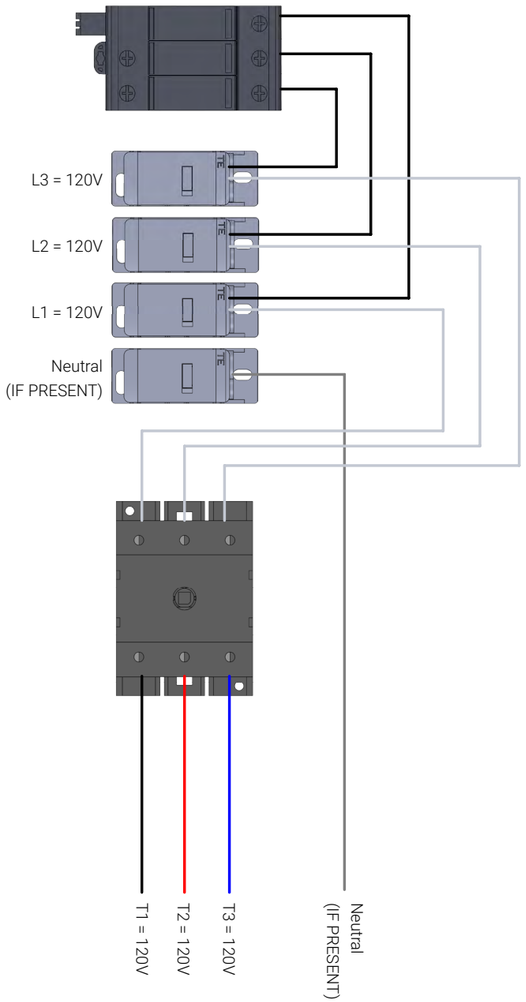

277VAC Y TRANSFORMER (3 PHASE) - 480VAC TO PAC Box

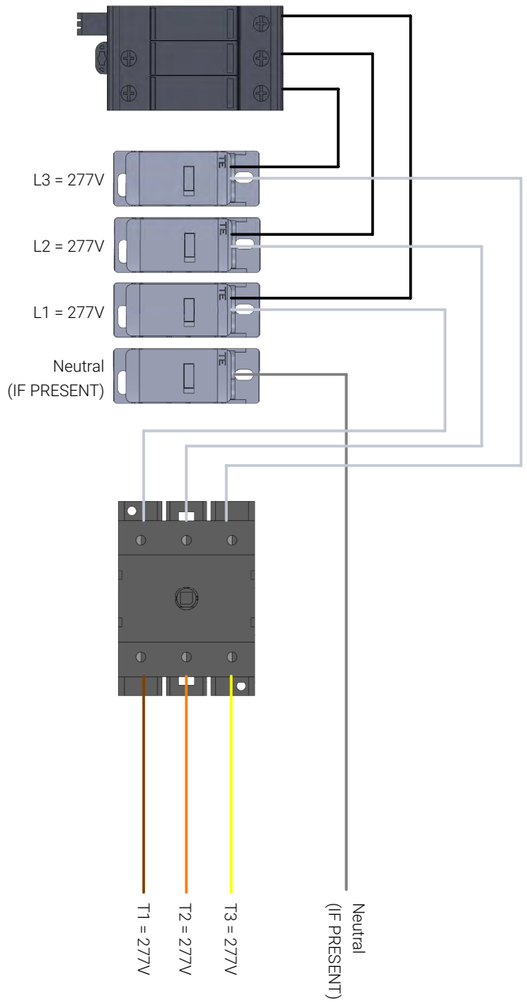

120 (SINGLE PHASE) - 240VAC TO PAC Box

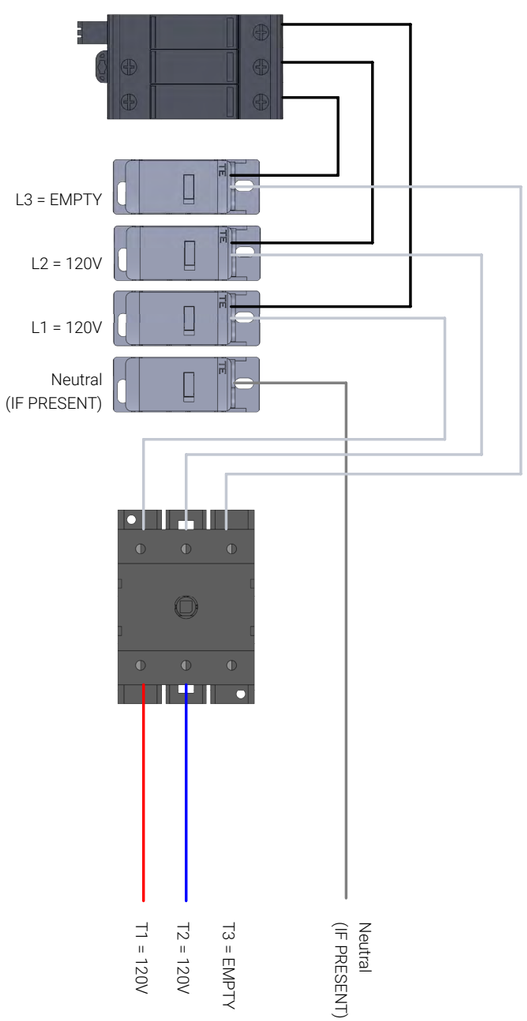

347VAC Y TRANSFORMER (3 PHASE) - 347VAC TO PAC Box

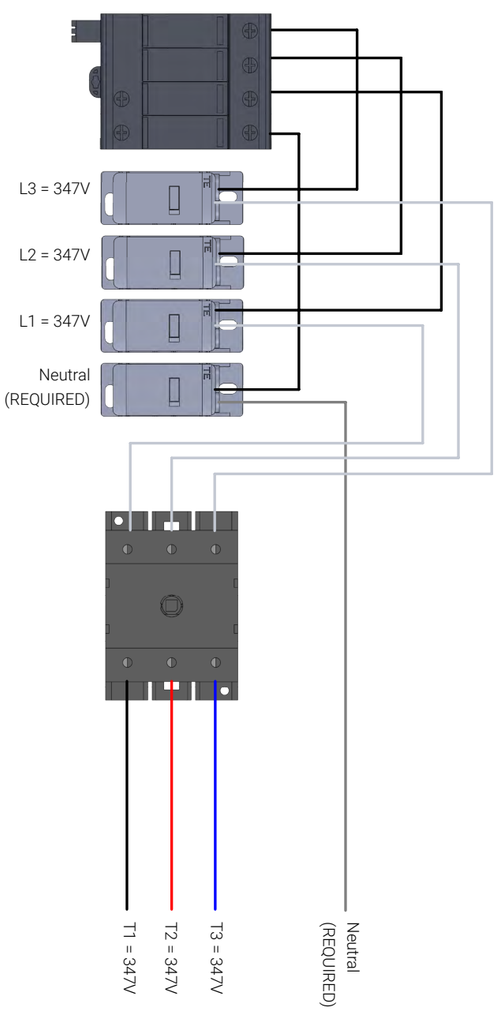

Note: the ground wire requires a ring terminal sized to fit over a #10 screw. If a ring terminal is not present, a contractor supplied crimp on ring terminal is required.

To install the ground wire, remove the #10 screw by loosening the nut. Place the #10 screw through the ring terminal on the ground wire and insert it back into the mounting hole. Replace the nut and torque to 20 in lbs.

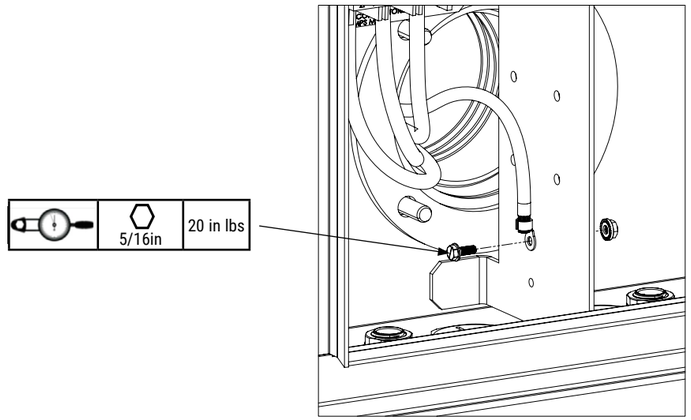

The power disconnect switch for the AC power wire accepts a wire gauge of 8-1/0 AWG. If present, the neutral wire will land in the distribution block marked with the "N" label. The distribution block accepts wire gauge of 8-2 AWG.

Note: for AC wires with diameters larger than the accepted by the disconnect switch, a multi tap or splice connector and jumper wire can be used (ILSCO PBT or equivalent). One splice connector is required per AC wire. The splice connector and jumper wire must be compliant with all regulatory requirements and rated for the appropriate current and voltage.

Prepare the AC wires by stripping them back .8" from the end. To install the AC power wires, insert the wires into the bottom side of the power disconnect switch. Wires should be inserted starting with position "T1" and moving towards "T3". Each wire must have its own terminal. Torque all respective screws on the disconnect switch to 55 in lbs using a 4mm allen wrench.

If present, prepare the neutral wire by stripping the end back .6". Open the lid on the bottom most distribution block marked with the "N" label by pulling up on the right side of the cap. The cap should rotate to the left. Loosen the largest set screw. Do not back the set screw all the way out. Insert the neutral wire into the largest opening on the right side of the distribution block. Torque the set screw to 44 in lbs using a 4mm allen wrench. Push the cap on the distribution block back down to close the cap.

A neutral wire is required for 347V configurations

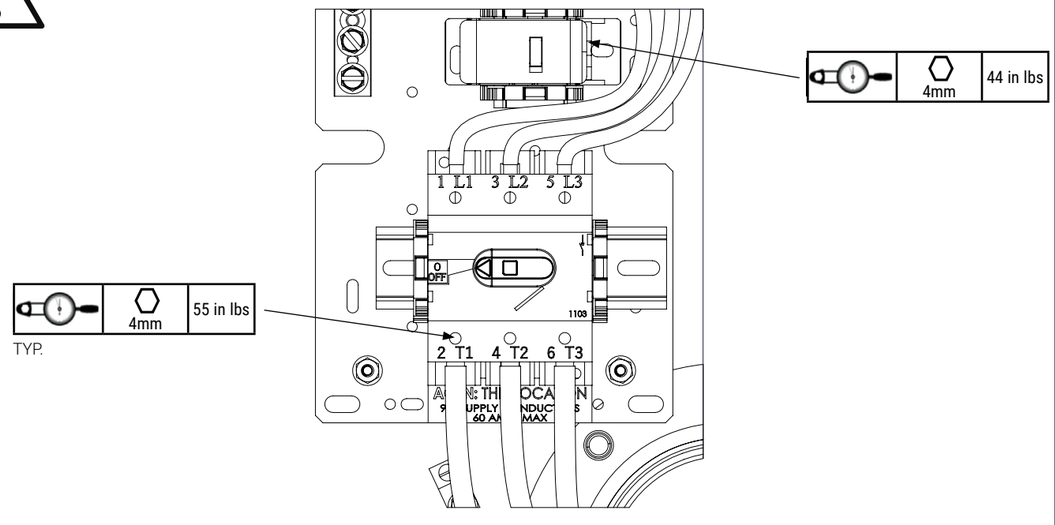

Use a cable tie to secure the wires and provide strain relief on the termination connections.

AC OUT TO PAC BOX

The PAC Boxes are shipped with factory installed 15ft or 30ft long AC and DC cables. The direction the AC cable is approaching the Distribution Box will determine the best way to route the cables. Features on the back side of the Distribution Box will facilitate the routing. Looking at the front of the Distribution Box (door side), all AC wire routing features will be on the left side of the enclosure. Refer to the PAC Box installation manual for information on how to route the AC cable to the Distribution Box.

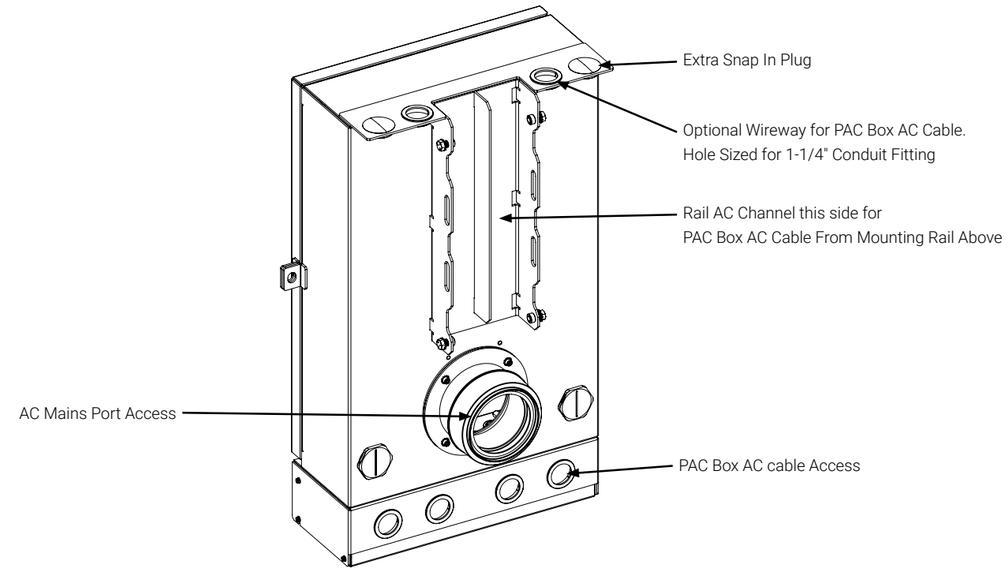

Prepare the Distribution Box by opening the false bottom. To route the AC cable into the Distribution Box, insert the cable through the bottom left grommets on the backside of the Distribution Box. Pull the cable through until any slack is removed. Cut any cable that extends beyond 30 inches from the bottom of the enclosure. Repeat this step for AC cables from all PAC Boxes.

Note:If conduit is used, remove the 1-1/4" snap in grommet on the left side of the enclosure. Install the conduit and conduit fittings per the manufacture's specifications.

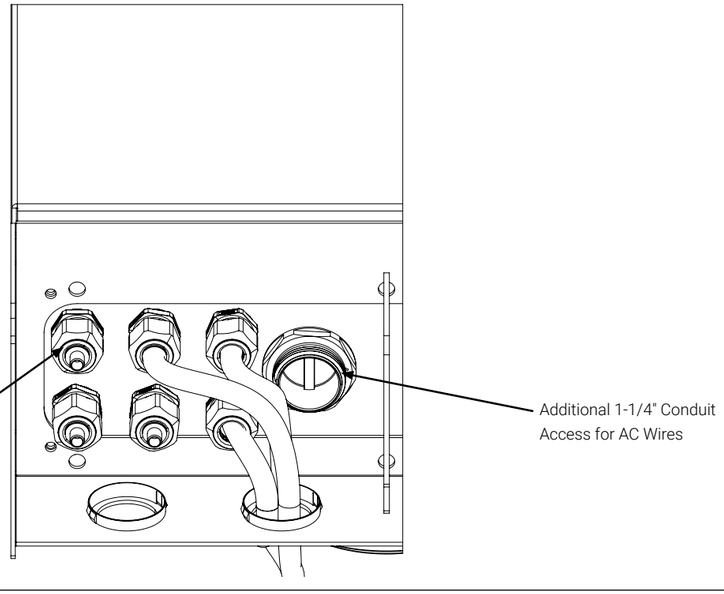

Next, route each cable through the cord grips at the bottom of the enclosure. Pull the cable through until all slack is removed. Tighten the cord grip hand tight plus 1 full turn. Repeat this step for all AC cables.

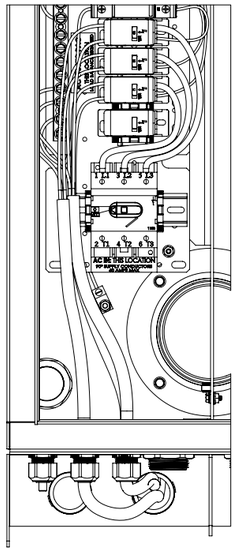

All terminations for the AC cable to the PAC Box are located in the upper left corner of the Distribution Box.

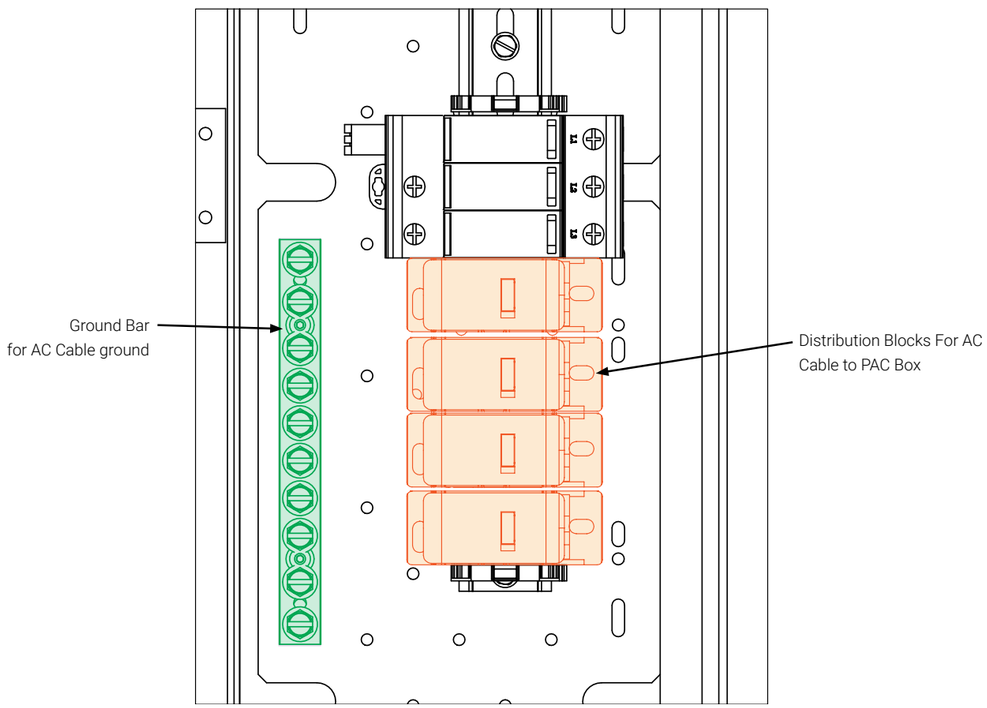

Once the AC cable is fully routed into the Distribution Box, prepare the cable end by stripping back the cable jacket approximately 6 inches.

Note: commercially available jacket strippers are recommended to speed up the cable preparation process and help protect the internal wire insulation from cuts during jacket removal.

The AC cable has 3 conductors.

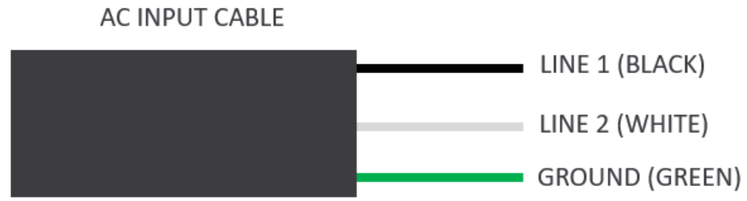

Strip the wire insulation back .5” from the end for each wire. Install wire crimp on ferrules sized for 14awg wire on each wire end per the manufacturers recommendation. Wire ferrules assures a good electrical contact between the stranded wire and distribution blocks.

Note: Wire ferrules must be supplied by the contractor.

Repeat the wire preparation process for each AC cable coming into the Distribution Box.

To install the green ground wires, loosen the ground terminal screws on the upper left ground block. Do not back the screws all the way out. Insert the ground wires into the ground block. Tighten the screws to 25 in lbs.

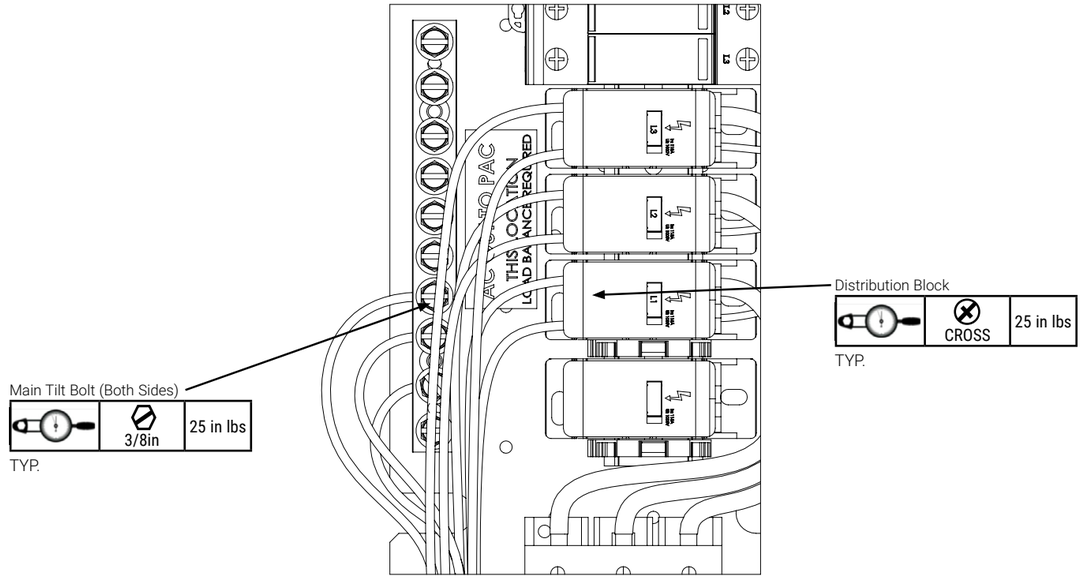

The black and white AC power wires will be installed into the left side of the distribution blocks. Each distribution block is labeled and corresponds to the labeling on the power disconnect switch.

T1-> L1

T2-> L2

T3->L3

The termination of the black and white AC cable wires is dependent on the AC mains electrical configuration. Refer to the schematic to determine the correct distribution block.

The power to each PAC Box must be load balanced appropriately for the electrical configuration of the entire system. The black and white wires on a single cable shall never be installed into the same distribution block.

The electrical wiring must be configured so the voltage into the AC cable matches the marked voltage on the PAC Box.

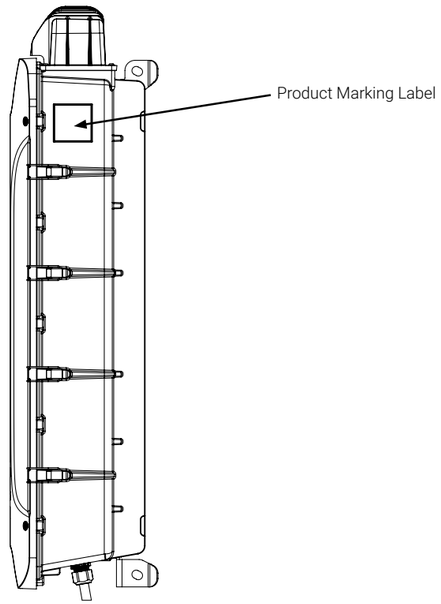

208V to PAC Box, 3 Phase (T1 = 120V, T2=120V, T3 = 120V)

480V to PAC Box, 3 Phase (T1 = 277V, T2=277V, T3 = 277V)

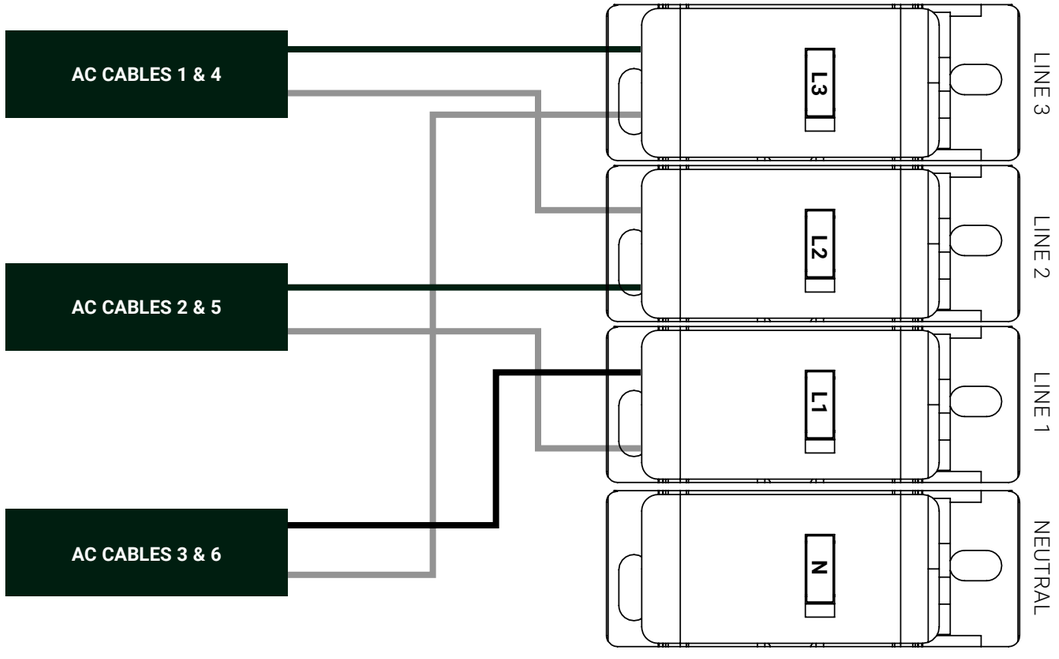

240V to PAC Box, Single Phase (T1 = 120V, T2=120V, T3 = Empty)

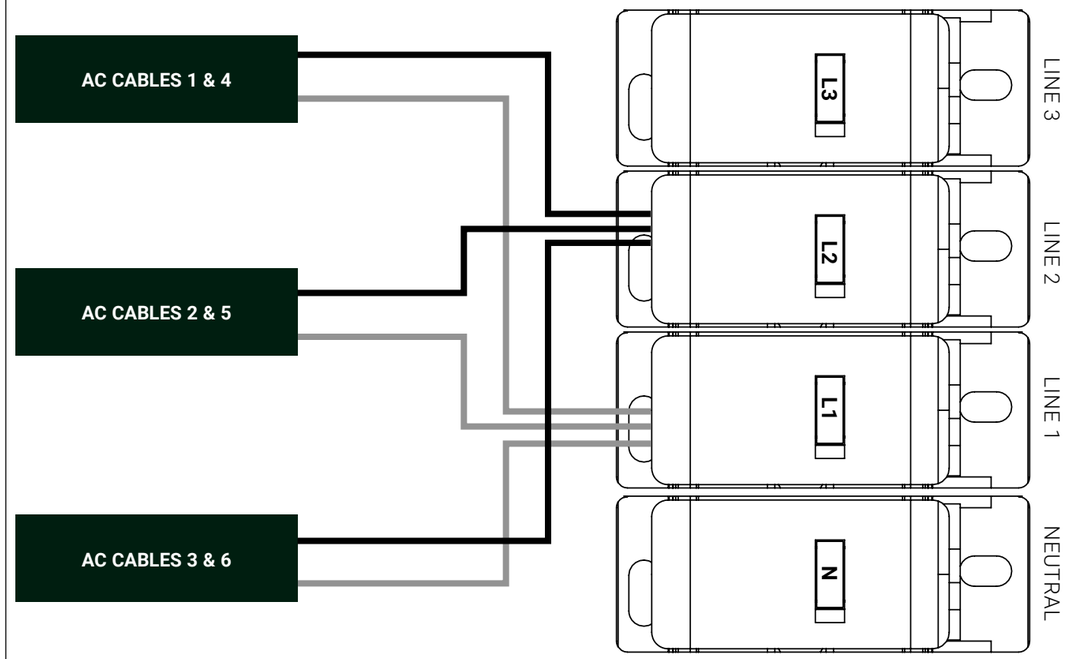

347V to PAC Box, 3 Phase (T1 = 347V, T2=347V, T3 = 347, N=Neutral)

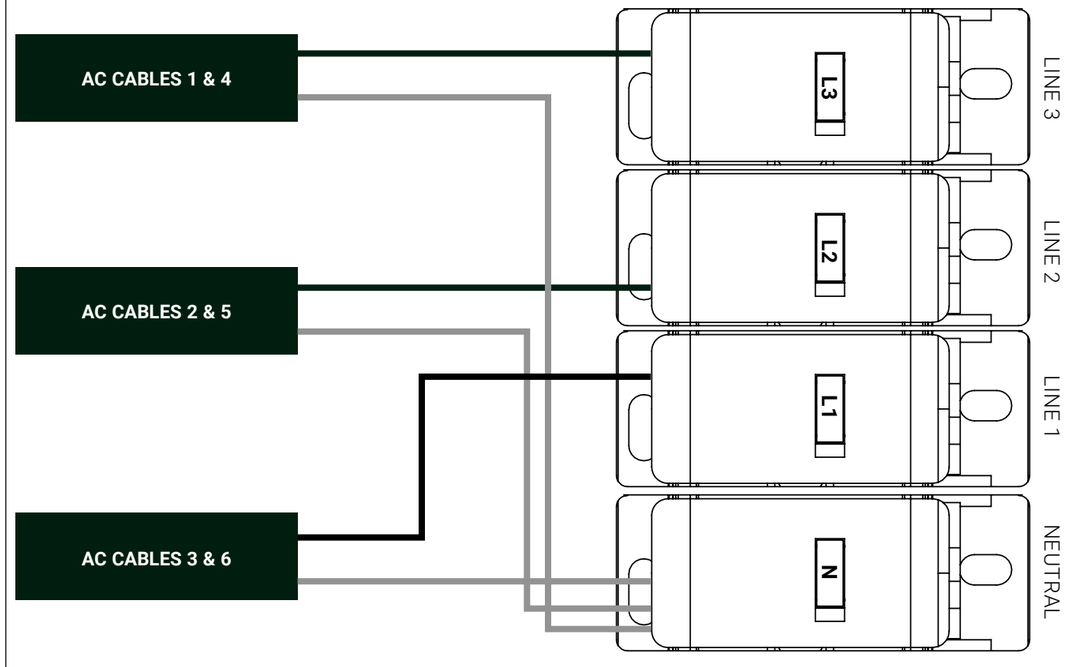

To install the AC cable into the proper distribution block, open the lid on the distribution block marked with the appropriate label by pulling up on the left side of the cap. The cap should rotate to the right. Loosen one of the 6 set screws on the left side of the distribution block. Each screw corresponds to the specific insertion hole. Do not back the set screw all the way out. Insert one of the AC power wires into the one of the openings on the left side of the distribution block. Torque the set screw to 25 in lbs using a posidrive – flat screwdriver. Repeat this for all black and white AC power wires.

Once, all the AC power wires are installed, push the caps on the distribution blocks back down to close the cap.

Use a cable tie to secure the cables and provide strain relief on the termination connections.

DC IN FROM PAC BOX

Similarly to the AC cable, the PAC Box mounting configuration and wire route to the Distribution Box will determine the best way to route the cables into the Distribution Box. Features on the back side of the Distribution Box will facilitate the routing. Looking at the front of the Distribution Box (door side), all DC wire routing features will be on the right side of the enclosure. Refer to the PAC Box installation manual for information on how to route the DC cable to the Distribution Box.

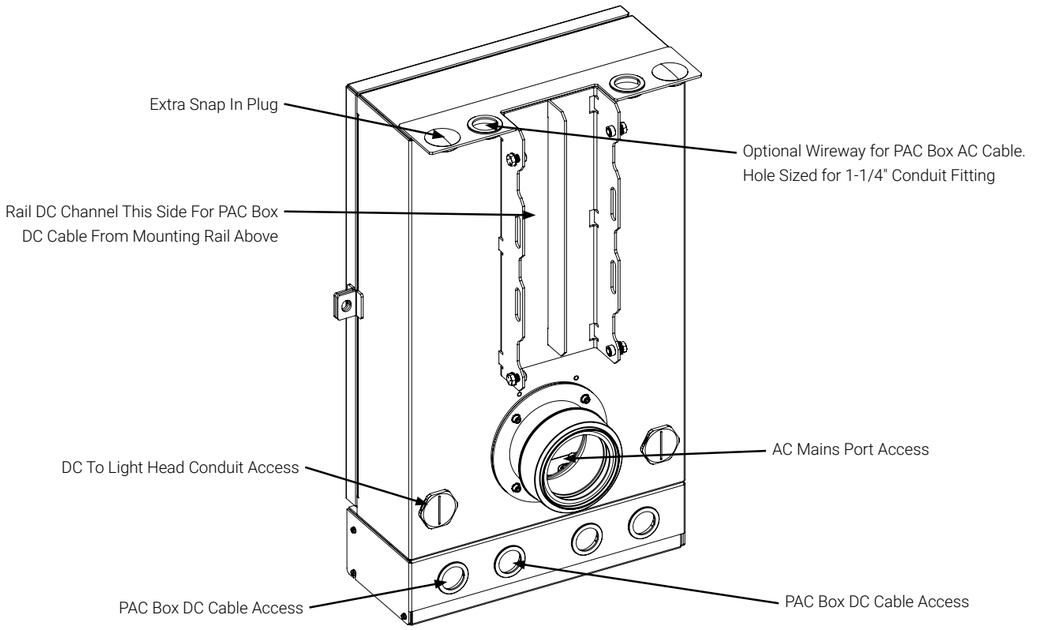

Open the false bottom if it is closed. To route the DC cable into the Distribution Box, follow the same procedure as the AC cable except all wire routing features are now on the right side of the box (looking from the front). Insert the cable through the bottom right grommets on the backside of the Distribution Box. Pull the cable through until any slack is removed.

Note: If conduit is used, remove the 1-1/4" snap in grommet on the right side of the enclosure. Install the conduit and conduit fittings per the manufacture's specifications.

All terminations for the DC cable from the PAC Box are located on the right side of the Distribution Box.

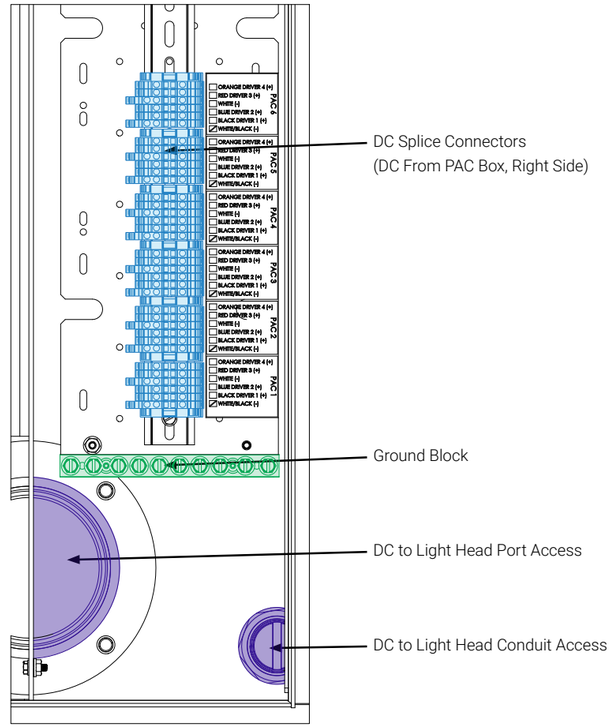

Route each cable through the cord grips at the bottom of the enclosure. Pull the cable through until all slack is removed. Tighten the cord grip hand tight plus 1 full turn. Repeat this step for all DC cables.

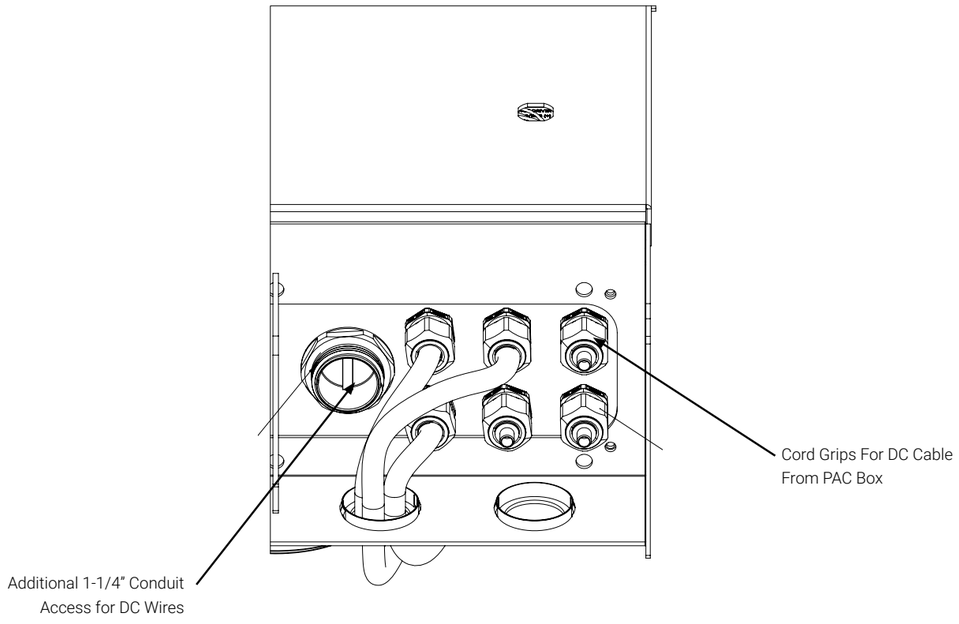

After the cable is secured through the cord grip, transfer any cable flag or identifier to just inside the enclosure.

Note: Flagging or marking the cable will help link the cable to the correct PAC Box.

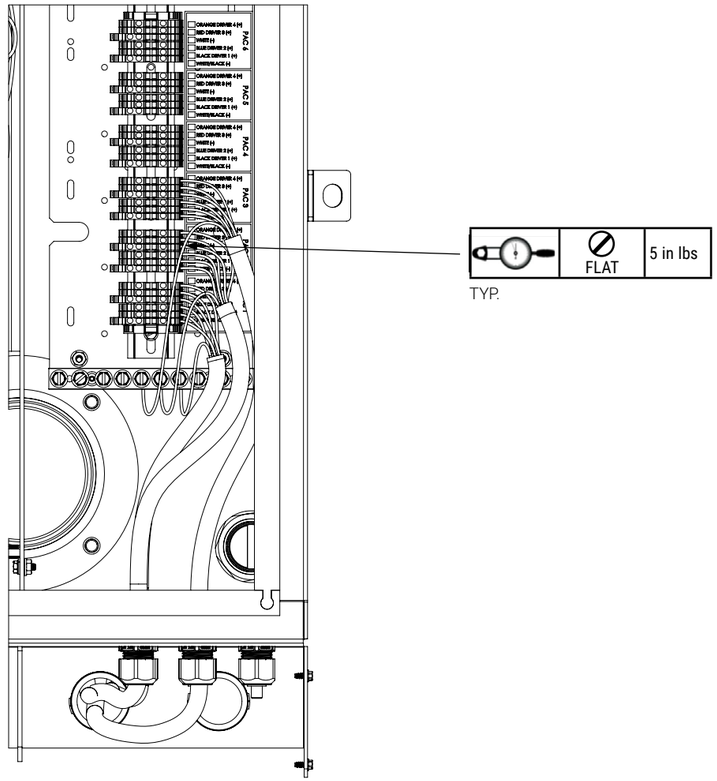

Cut any cable that extends beyond 30 inches beyond the cord grip. Repeat this step for DC cables from all PAC Boxes.

Note: depending on the DC cable landing location inside the Distribution Box, the exact cut length may need to be adjusted.

Once the DC cable is cut to length, prepare the cable end by stripping back the cable jacket approximately 6 inches.

Note: Commercially available jacket strippers are recommended to speed up the cable preparation process and help protect the internal wire insulation from cuts during jacket removal.

The DC cable has 6 conductors. The configuration of the DC cable will depend on the Light Head type and number of drivers in the PAC Box.

Note: The LumaSport Prism PAC Box may have two DC cables and utilizes Distribution Box real estate for two PAC Boxes.

DC OUTPUT CABLE LUMA**SPORT 8**

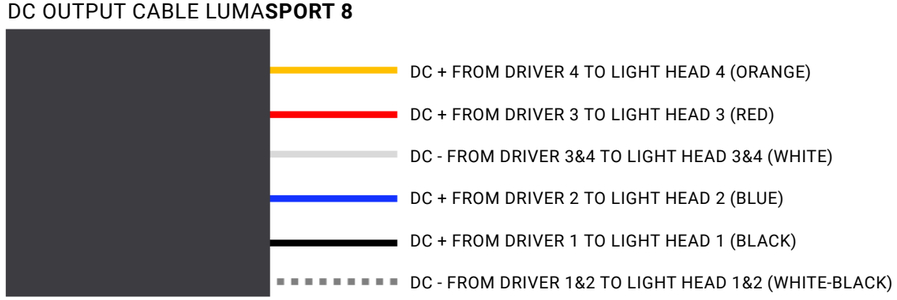

DC OUTPUT CABLE LUMA**SPORT 16**

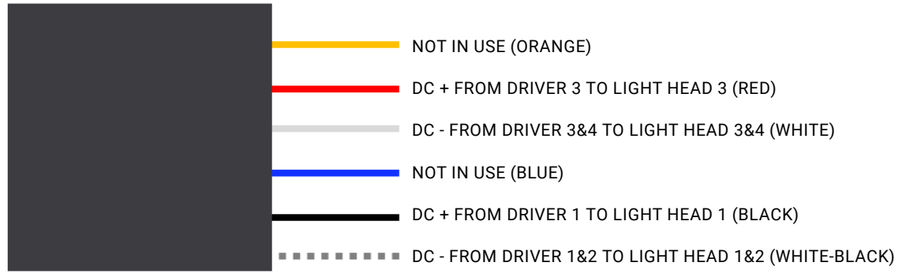

DC OUTPUT CABLES LUMA**SPORT 8** PRISM AND LUMA**SPORT 16** PRISM (QTY 2)

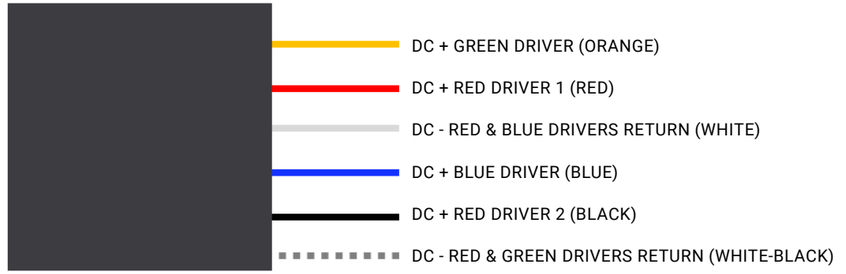

Refer to the PAC Box PRODUCT LABEL

Strip the wire insulation back .4" from the end for each wire.

Repeat the wire preparation process for each DC cable coming into the Distribution Box.

Note: If the PAC Box DC cable has 7 conductors, the green ground wire should be landed on the ground bar below the splice connectors.

Insert the DC cable wires from each PAC Box into the hole on the right side of the splice connector identified by the corresponding color on the DC label. Torque the right screw on the DC splice connector to 5in lbs using a small flat head screw driver.

Note: all white or white/black DC - wires must be inserted into the white three position splice connectors.

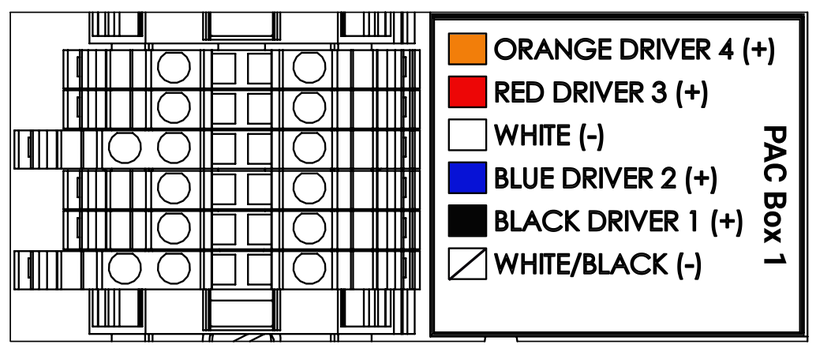

Repeat this step for all wires in one DC cable.

Once a PAC Box DC cable is fully installed, label the Distribution Box or a prominent document with the PAC Box location identifier and PAC Box number as wired in the Distribution Box. Refer to the PAC Box installation manual for the PAC Box labeling convention.

Labeling is important because:

- It is required to track the wiring between the different components of the remote power system.
- Limits improper addressing during the control commissioning process.
- Match product label sticker color information with the tape color on DC drop cables for Lumasport PRISM fixture

Repeat the DC cable wiring process for the DC cables for all PAC Boxes. Its easiest to start at the bottom with the PAC Box one location and work upwards.

Note: the Distribution Box can support up to 6 DC cables. LumaSport Prism PAC Boxes use the splice connectors for two PAC Boxes.

Use a cable tie to secure the cables and provide strain relief on the termination connections.

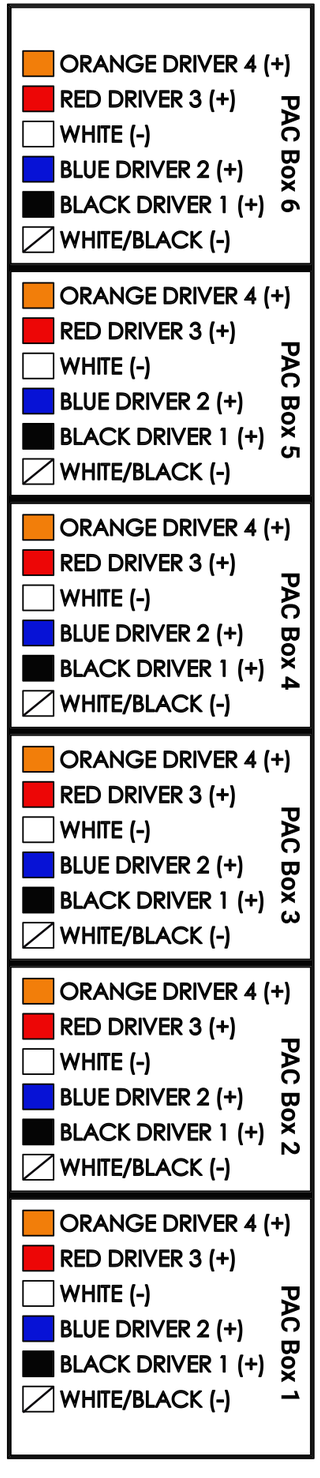

DC TO LIGHT HEAD OR DROP CABLE

For pole mounted applications, the drop cable will carry the DC current to the Light Head. For special cases, where the Distribution Box and PAC Boxes are not directly mounted at the base of a pole, longer DC cable runs may be required. In these cases, the maximum DC cable distance connecting the light head to the PAC box is 300ft.

The DC wires to the Light Head must be 14AWG, 600V, 90C rated and must be complaint with all regulatory requirements. The wire color can vary for new construction or a retrofit.

In all retrofit applications, the wiring must be carefully mapped to correctly connect the driver to the Light Head. New construction and new crossarms will come with connectorized drop cables and factory labeled wiring.

Note: It is common for the drop cable to be spliced or connectorized within the pole or crossarm. Therefore the wire color at the bottom of the pole and the wire color at the top of the pole may not match. Any wire labeling should be documented.

Note: If the drop cable has a dedicated ground wire, the green ground wire should be landed on the ground bar below the splice connectors.

If the wiring is unknown, wires should be inspected for continuity before installation.

The connection location is different for each fixture type. Driver DC + must connect to the Light Head DC +. The Driver DC - needs to connect to the Light Head DC -. All components must be grounded. Failure to do this can damage the Light Head and PAC Box.

The DC wires to the Light Head can be routed into the Distribution Box through the port adapter or through 1-1/4" conduit. If the port adapter is used, the DC wires to the Light Head or drop cable can be pulled directly through the port. If conduit is used, remove the 1-1/4" threaded plug on the right side of the enclosure. Install the conduit and conduit fittings per the manufacture's specifications.

Note: All conduit and conduit fittings must be supplied by the contractor.

The Light Dead DC wires or drop cables should be landed on the left side of the DC splice connectors. To make the electrical connection, strip the wire insulation back .4" from the end for each wire. Insert the DC cable wires from Light Head into the hole on the left side of the splice connector as indicated in the following images. Torque the left screw on the DC splice connector to 5in lbs using a small flat head screw driver. Repeat the splice connection process for each DC wire coming into the Distribution Box.

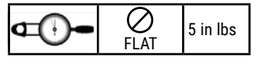

TYP.

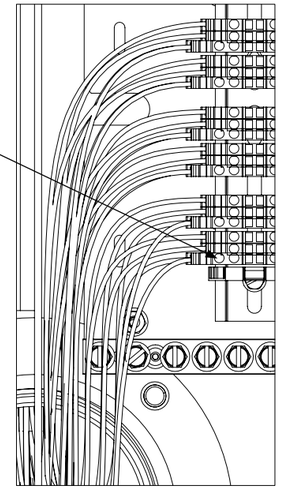

Note: Give a light pull test of each wire to verify a firm connection.

Each PAC Box can support up to 4 qty LumaSport 8 Light Heads or 2 qty LumaSport 16 Light Heads or 2 qty LumaSport Prism Light Heads. This results in a maximum Light Head quantity of 24 qty LumaSport 8 Light Heads or 12 qty LumaSport 16 Light Heads or 6 Qty Lumasport PRISM light heads per Distribution Box. The DC wiring in the splice connectors will be different depending on the Light Head type. Refer to the appropriate Light Head installation manual for more information on the Light Head DC + and DC – identification.

LumaSport 8 DC to Light Head Wiring

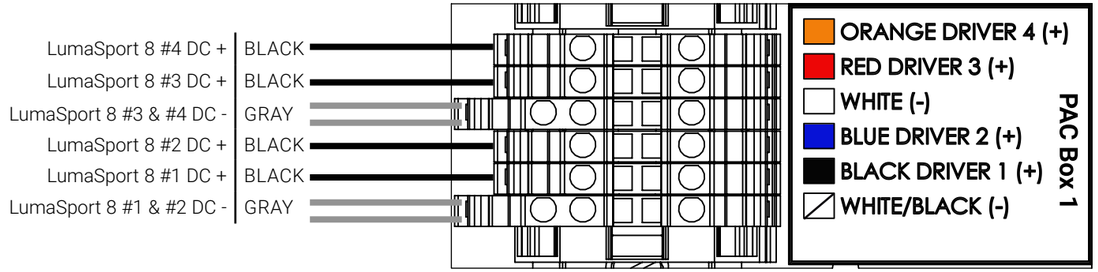

Wiring to LumaSport 8 Light Heads will require 2 DC – wires to be inserted into the white twin splice connector.

LumaSport 16 DC to Light Head Wiring

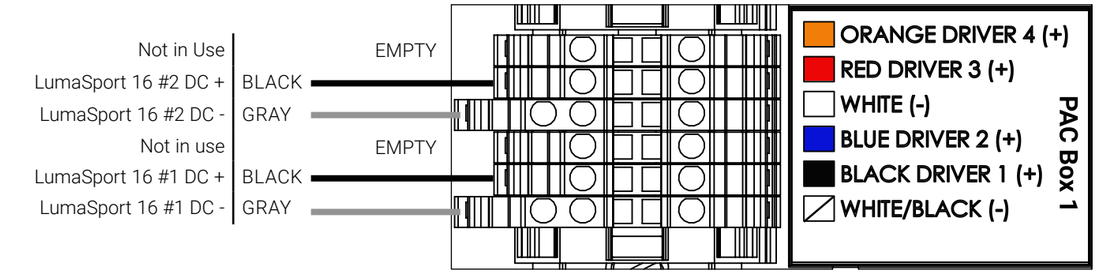

Wiring to LumaSport 16 Light Heads will leave two gray splice connects empty at the blue and orange positions.

LumaSport 8 Prism & LumaSport 16 Prism DC to Light Head Wiring

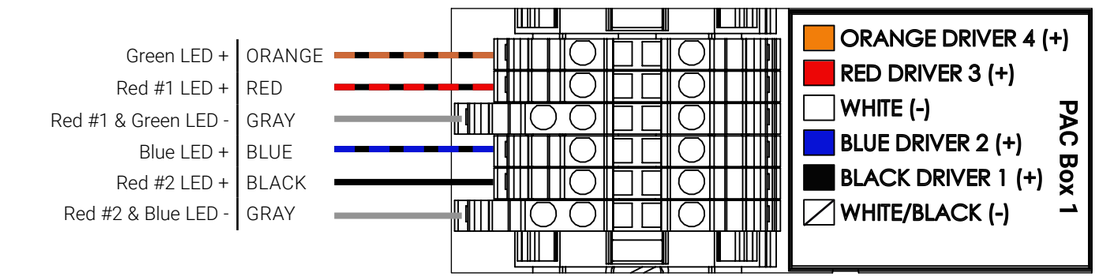

Match Tape color on drop cables with the wire color information on label sticker

Note: In retrofit applications. Drop cable may have a label or a colored tape matching with label sticker color information. If the labeling is removed, be sure to map the Wires on the top of the pole and bottom of the pole.

Note: not all PAC Boxes are fully loaded to support the maximum number of fixtures. Refer to the cat logic identifier on the PAC Box product label for the number of Light Heads the PAC Box supports. When a PAC Box is partially filled, the drivers will be removed in the following order; Driver 4 (Orange), Driver 3 (Red), Driver 2 (Blue). The locations on the left side of the splice connector corresponding to the partially populated PAC Box should remain empty. Refer to the PAC Box installation manual for the configurations of partially populated PAC Boxes.

LIGHT HEAD			DISTRIBUTION BOX
CABLE TYPE	DESIGNATION	WIRE COLOR	SPLICE CONNECTOR LANDING
RAC	DC +	BLACK	GRAY SPLICE CONNECTOR
	DC -	WHITE	WHITE TWIN SPLICE CONNECTOR
	GROUND	GREEN	POLE GROUND

LIGHT HEAD		
CABLE TYPE	DESIGNATION	WIRE COLOR
C10	DC +	BLACK
	DC -	WHITE
	GROUND	GREEN

DROP CABLE CONNECTOR (NEW CONSTRUCTION)

For all installations with a new Ephesus provided pole or crossarm, a connector may be provided to interface with the drop cable. The connector will be labeled with the fixture number and DC + or DC - with black and white tape. PRISM wires will include color markings.

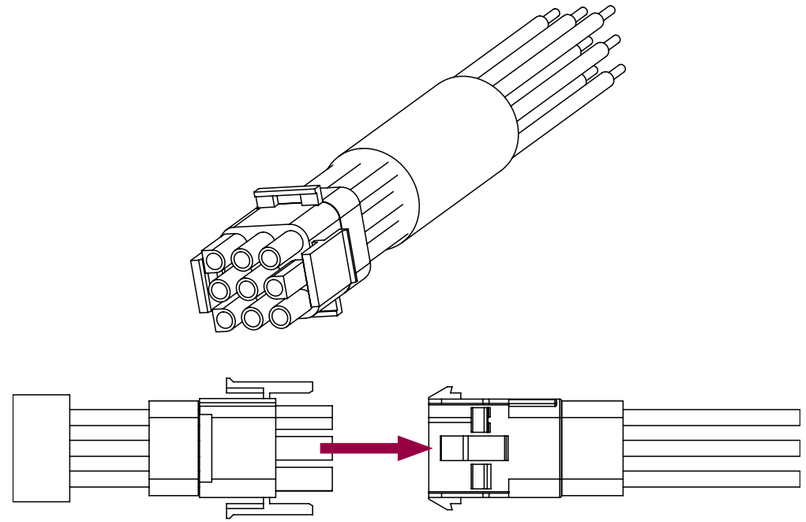

FINAL STEPS

Once the Distribution Box is fully wired, any open ports or cord crips must be plugged. This includes any cord grips that do not have AC or DC cables passed through.

Prior to closing the door, verify all wires are secured. No wires shall be resting on the bottom of the enclosure.

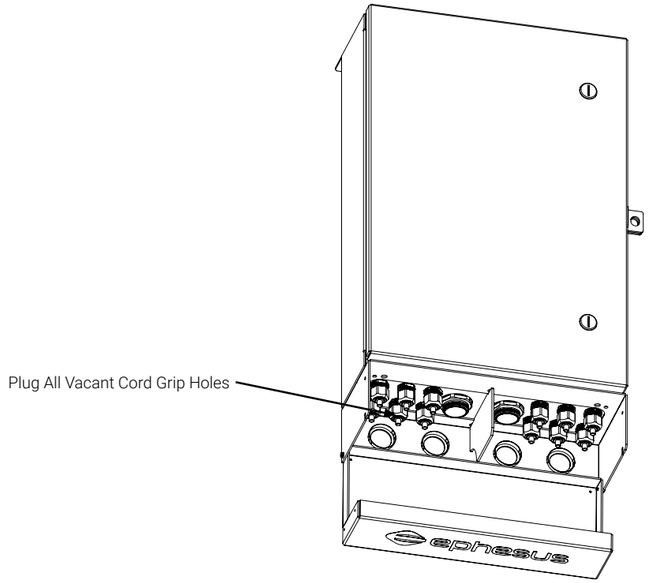

If some of the large access holes in the back of the false bottom are vacant, replace the grommet with the extra snap in plug on the top of the Distribution Box. Press in the snap features on each side of the snap in plug and press from underneath to remove the plug. Do not pry.

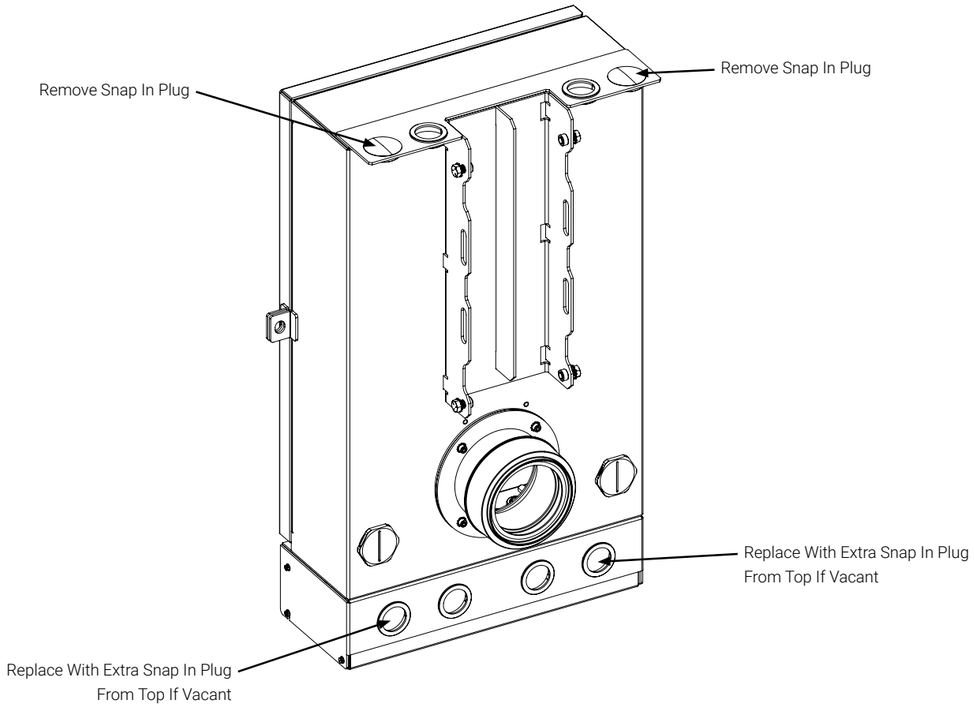

Close the false bottom by rotating it up. Insert the two hex screws. Torque all screws supporting the false bottom to to 18 in lbs.

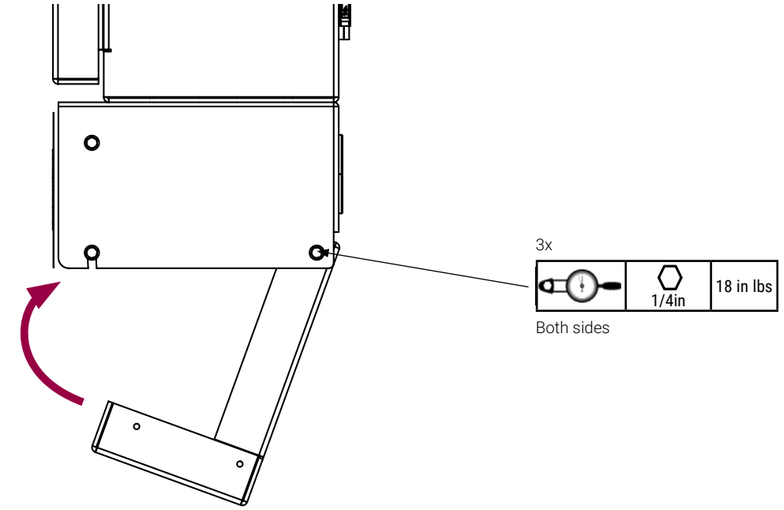

Turn the disconnect switch to the on position. On is in the vertical position.

The disconnect switch should never be operated under load. Power into the Distribution Box must always be off when the door is open.

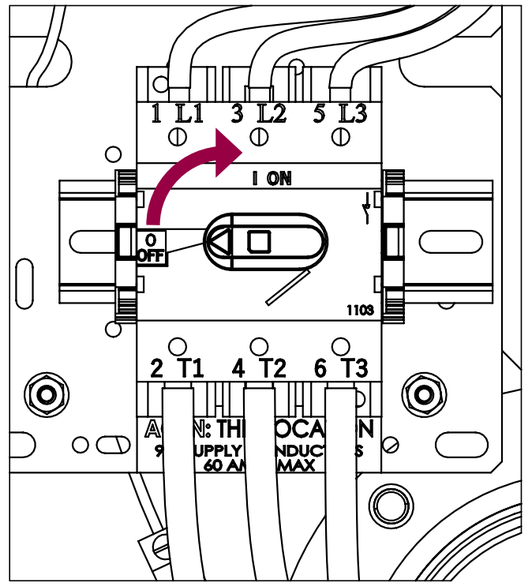

Close the door and lock it using the two 1/4 turn tooled locks.

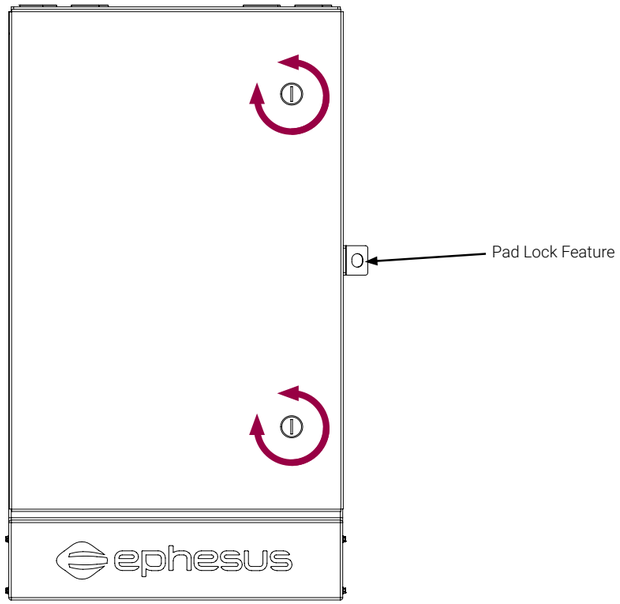

Install a pad lock into the Distribution Box pad lock feature If required.

Maintenance & Preventative Maintenance

Fixture Care and Maintenance

All luminaires are prepared with a powder-coated finish. The finish on exterior luminaires may weather over time, depending on the environmental conditions at the installation site. Proper care of the luminaires will maintain their performance and appearance.

Follow a regular maintenance schedule to retain optimal light output and thermal performance. Lack of preventative maintenance may disqualify owner from warranty. Not adhering to this minimum system cleaning requirement is considered negligence as outlined in your product warranty documents. Refer to your product and/or labor warranty documentation for further details.

Always disconnect power from the luminaire before opening the driver box.

Cleaning

1. Clean all luminaires at a minimum of once every 12 months from receipt of your product.
2. Remove physical elements such as dirt, leaves and other foreign debris from the luminaire housing that can block and modify the air cooling (heatsink fins)
3. Wipe the optical lenses with a clean, dry, cotton cloth to remove dust and other contaminants. A non-abrasive optical cleanser or water may be used periodically.
4. Do not apply cleaners in direct sunlight or at elevated temperatures

Inspection of Hardware

Inspect mounting system and products at least once every 12 months. Replace all rusted hardware elements.

Troubleshooting

The Ephesus luminaire is designed to provide many years of reliable quality lighting. If the system appears to not be operating correctly, perform the following steps:

Gather Data

The first step is always to find out as much about the issue as possible. Ask the following questions:

1. **How many fixtures are not operating correctly?** If only one fixture is not responding, continue investigating at that fixture itself. If a group of fixtures are not responding correctly, start at the source of the power or controls for that group.
2. **Have any obvious external forces been in the area?** For instance, were any riggers, electricians, or other workers near the fixtures or controls? Have there been any power disturbances in the facility such as lightning storms?
3. **Are your fixtures responding according to the input control function?** Run the system through some different control scenes, including all on and then all off (blackout mode). Take note of any fixtures not responding correctly to the scenes.

Problem	Remedy
Does not power on	• Verify the Distribution Box has AC power • Verify proper wiring to the Distribution Box, PAC Boxes and Light Heads • Check electrical connections at the Light Head/crossarm, drop cable/ Distribution Box, and Distribution Box/PAC Box interfaces. • Verify electrical connections by performing a basic pull test to confirm that each cable is properly wired to the Distribution Box. • Check defined default and basic function of the fixture in installation manual for PAC • Verify control signal is above 50%.
Does not respond to controls	• Reset the fixture by turning all power sources off for at least 10 seconds. • Inspect all system control wiring to make sure there are no poor connections or breaks in the control wiring.

The Distribution Box is equipped with pole level surge protection. The status of the surge protection is shown on the top of the surge module. If the bars are green, the surge module is still in good operating order. If not, it must be replaced.

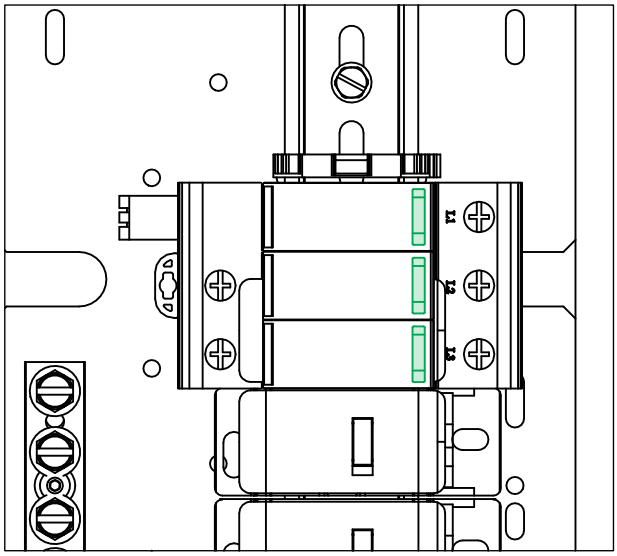

Fixture Replacement

Contacting Warranty Technical Support

1. Before you call, make sure you have completed the troubleshooting steps.
2. Gather as much detailed information as possible about the situation.
3. Have your fixture and project information handy, including the model number of the fixture in question.

Refer to your fixture warranty document for more information

If you have attic stock fixtures available and need to replace a fixture, simply follow the installation instructions in this manual to replace the fixture in question. Be sure to address the replacement fixture with the correct luminaire number.

All Luminaires, materials, and accessory equipment being returned through the warranty process need to be placed back in their original packaging in the same orientation that they were originally shipped from the factory. If the packaging is damaged or if there are questions on the orientation in returning equipment and materials, you need to contact the Warranty Department for replacement packaging materials at:

EphesusWarranty@Signify.com | +1 (800)-573-3600

CLICK OR SCAN FOR WARRANTY INFORMATION & CLAIM FORM

Warranties and Limitation of Liability

Please refer to www.cooperlighting.com/global/resources/legal for our terms and conditions.

Cooper Lighting Solutions
1121 Highway 74 South
Peachtree City, GA 30269
P: 770-486-4800
www.cooperlighting.com

© 2024 Cooper Lighting Solutions
All Rights Reserved.

Specifications and dimensions
subject to change without notice.