# Installation Instructions - Corelite Discreet Surface Mount LED

## ⚠WARNING

**Risk of Fire, Electrical Shock, Cuts or other Casualty Hazards- Installation and maintenance of this product must be performed by a qualified electrician. This product must be installed in accordance with the applicable installation code by a person familiar with the construction and operation of the product and hazards involved.**

**Risk of Fire and Electric Shock- Make certain power is OFF before starting installation or attempting any maintenance. Disconnect power at fuse or circuit breaker.**

**Risk of Fire- Minimum 90°C supply conductors.**

**Risk of Burn- Disconnect power and allow fixture to cool before handling or servicing.**

**Risk of Personal Injury- Due to sharp edges, handle with care.**

**Failure to comply with these instructions may result in death, serious bodily injury and property damage.**

**DISCLAIMER OF LIABILITY: Cooper Lighting Solutions assumes no liability for damages or losses of any kind that may arise from the improper, careless, or negligent installation, handling or use of this product.**

**IMPORTANT:** Read carefully before installing fixture. Retain for future reference.

**NOTICE:** Green ground screw provided in proper location. Do not relocate.

**NOTICE:** Fixture may become damaged and/or unstable if not installed properly.

**Note:** Specifications and dimensions subject to change without notice.

**ATTENTION Receiving Department:** Note actual fixture description of any shortage or noticeable damage on delivery receipt. File claim for common carrier (LTL) directly with carrier. Claims for concealed damage must be filed within 15 days of delivery. All damaged material, complete with original packing must be retained.

COOPER
Lighting Solutions

## Wiring Table

**OLD**

**Power Supply (Input)**

- Black (BK) - Hot
- White (WT) - Neutral
- Green (GN) - Ground
- Violet (VT) - Dimming (+)
- Gray (GY) - Dimming (-)

**NEW**

**Power Supply (Input)**

- Black (BK) - Hot
- White (WT) - Neutral
- Green (GN) - Ground
- Violet (VT) - Dimming (+)
- Pink (PK) - Dimming (-)

**Power Supply (Input) - When Applicable**

- Black/Red (BK/RD) - Emergency Hot
- White/Red (WT/RD) - Emergency Neutral
- Black/Orange (BK/OR) - 2nd Circuit Hot
- White/Orange (WT/OR) - 2nd Circuit Neutral
- Orange (OR) - 2nd Circuit Dimming (+)
- Yellow (YL) - 2nd Circuit Dimming (-)
- Blue (BL) - Battery/Emergency Unswitched Hot

**Vivid Tune**

- Violet/White (VT/WT) - 1st Circuit CCT (+)
- Gray/Black (GY/BK) - 1st Circuit CCT (-)
- Black/White (BK/WT) - 2nd Circuit CCT (+)
- White/Yellow - 2nd Circuit CCT (-)

*Please note: The grey dimming wire will be changed to a pink wire in 2022.*

---

## Recommended Equipment:

- 1/4" nut driver
- Flathead screwdriver
- Gloves

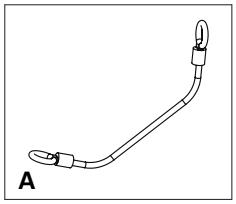


Safety Cable

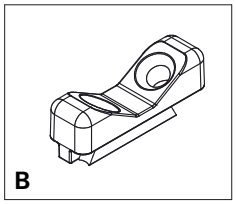


Cast joiner

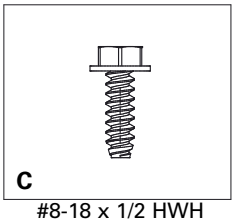


#8-18 x 1/2 HWH

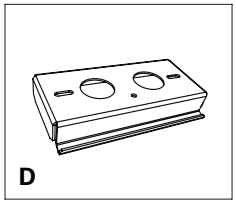


Surface Mount Bracket

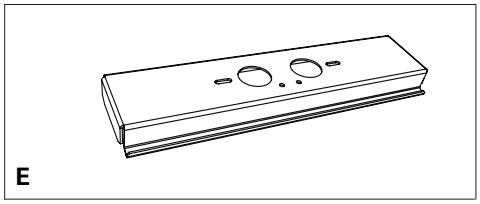


Dual Surface Mount Bracket

## System Overview

**SQ4 Joint Kit(s)**

- (x2) Cast joiners (B)
- (x4) #8-18 x 1/2 HWH Screws (C)
- (x2) Safety Cables (A)

NOTE: 1 kit required for each fixture-to-fixture joint

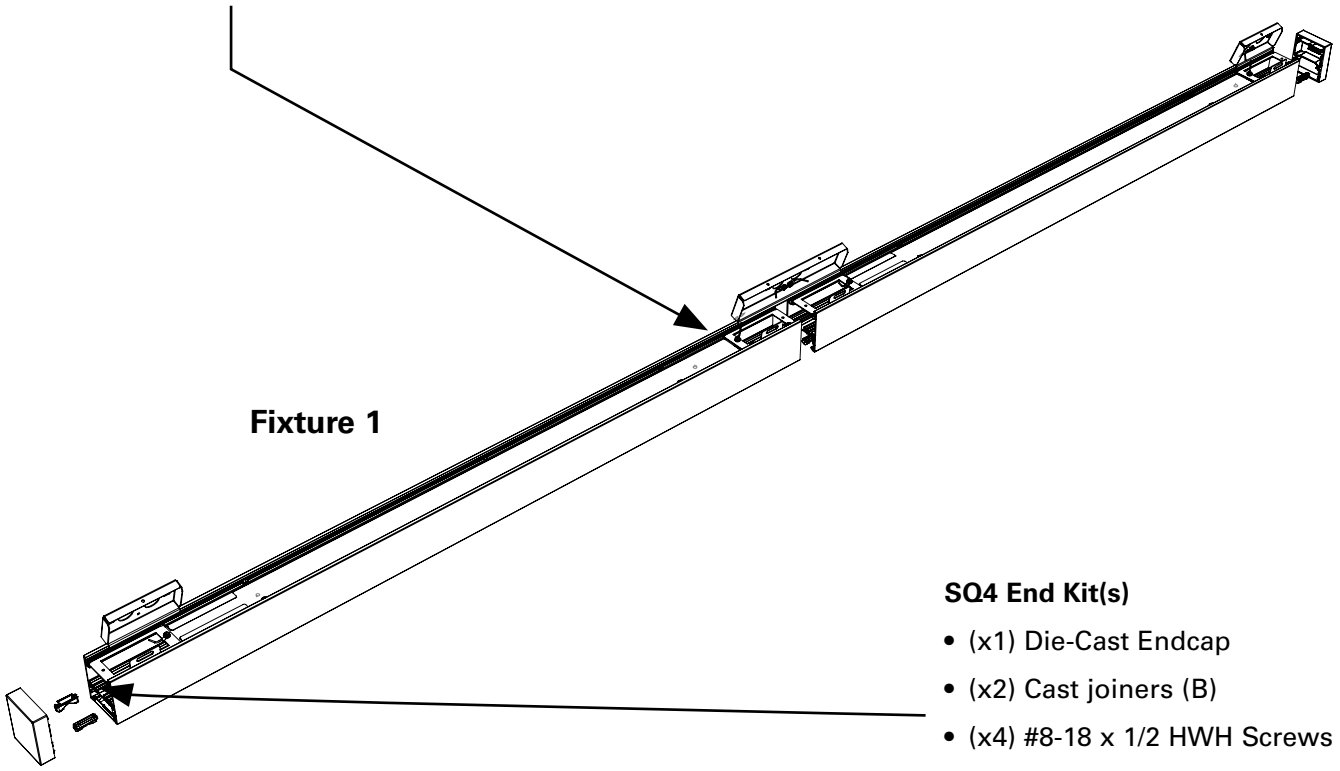


**SQ4 End Kit(s)**

- (x1) Die-Cast Endcap
- (x2) Cast joiners (B)
- (x4) #8-18 x 1/2 HWH Screws (C)

NOTE: 2 kits required for each run (one for each end)

**Mount Spacing**

Align the beginning of run Surface Mount Bracket with the end of the fixture. The distance to the center of each subsequent bracket should then match each nominal fixture length. The end of run bracket should then be aligned with the end of the last fixture.

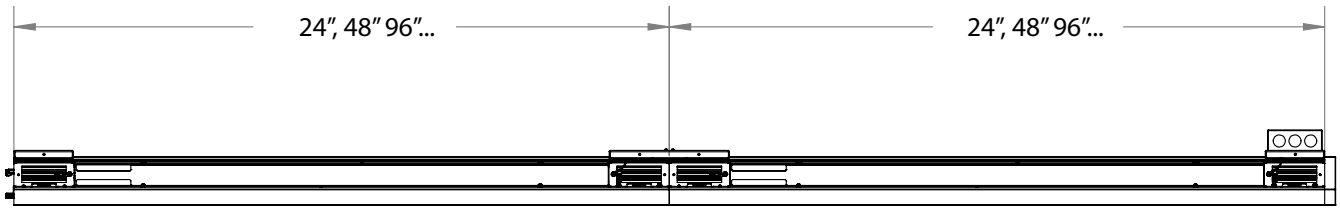

## ① Joining Hardware

Remove one baffle section from each end of the fixture.

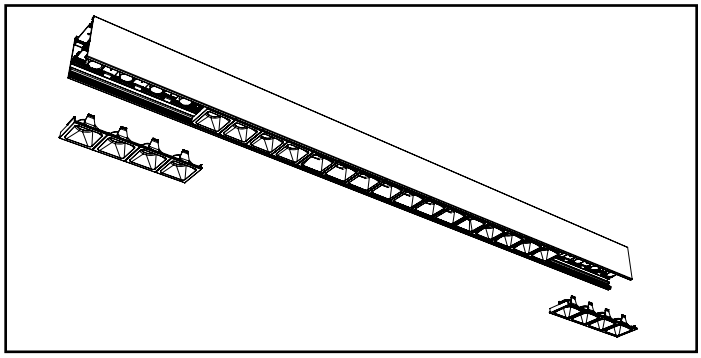

Install cast joiners at both ends of the fixture using the provided screw (C).

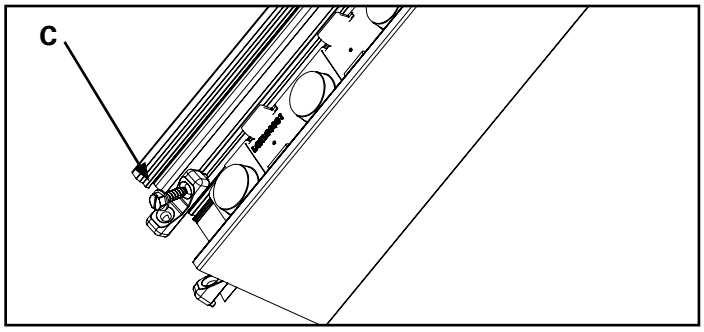


Secure the provided safety cable(F) at both ends of the fixture as shown below.

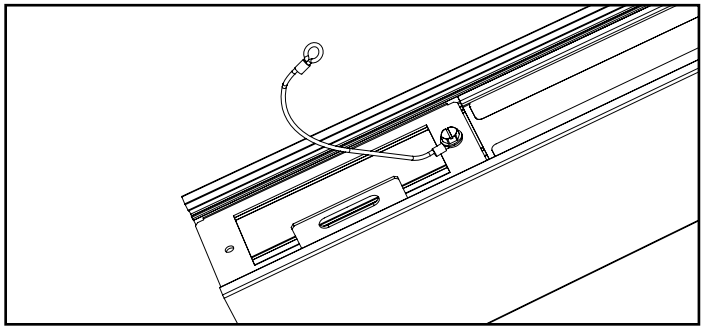

## ② Mounting Fixture

Secure the surface mount brackets to the mounting surface.

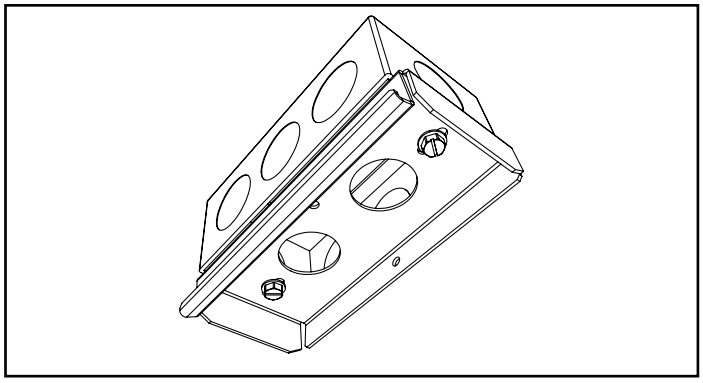

Hang fixture from brackets and secure safety cable to the surface mount bracket (as shown below).

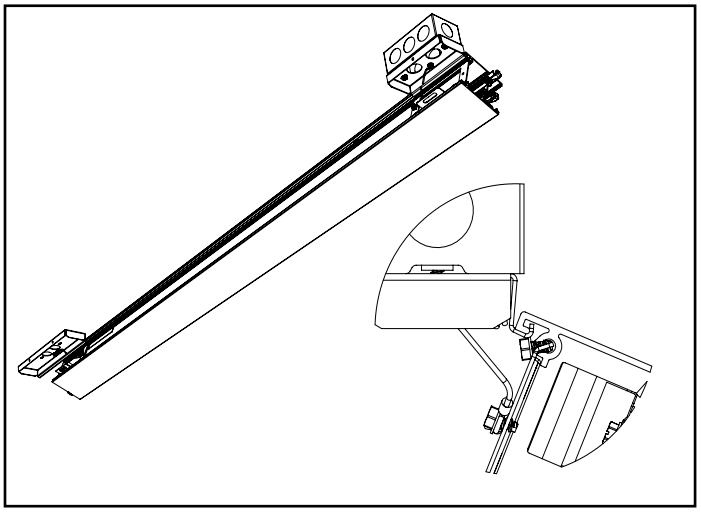

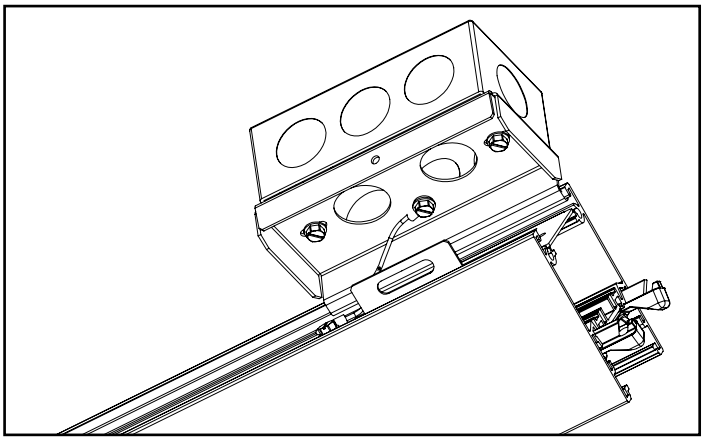

## ③ Power Drop

Wire fixture following the wiring guide provided on page 2 of these instructions.

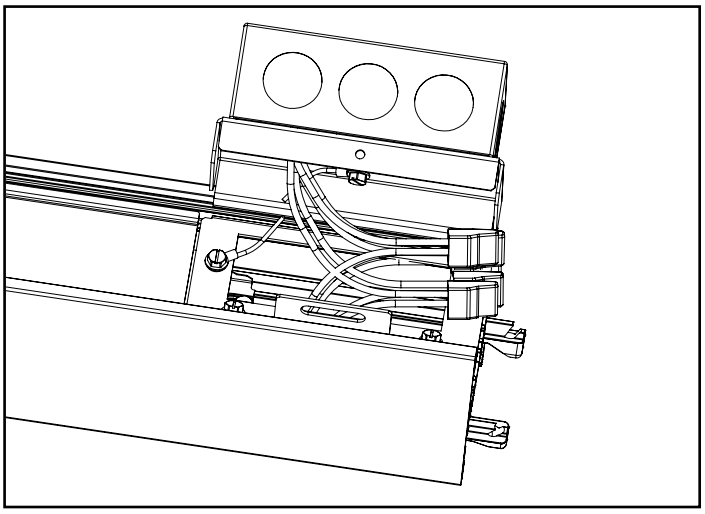

## ④ Joining

Hang the next fixture in the run on the Dual Surface Mount Bracket, attach the safety cable to both the fixture, and the bracket and make through wiring connections.

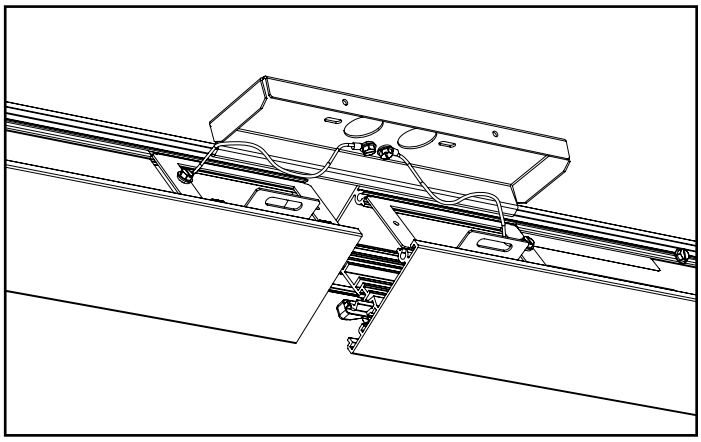

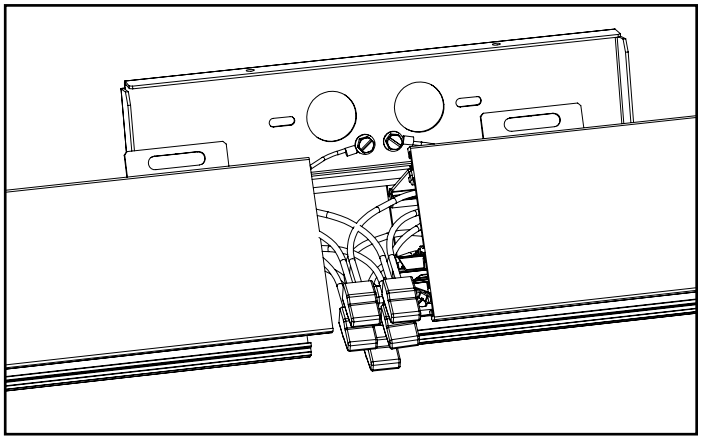

Push the fixtures together and fasten joiners using the provided #8-18 x 1/2 HWH screws (C).

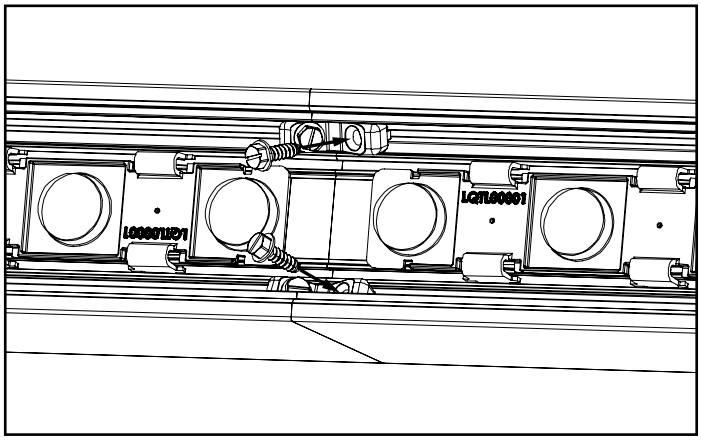

Rotate fixture until level and secure with the provided #8-18 x 1/2 HWH screws (C).

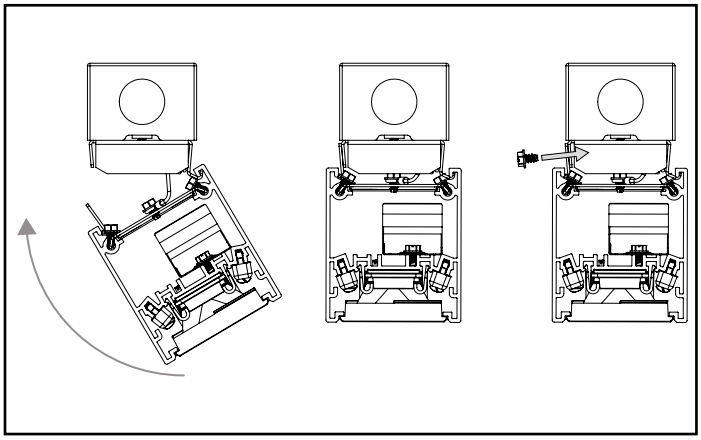

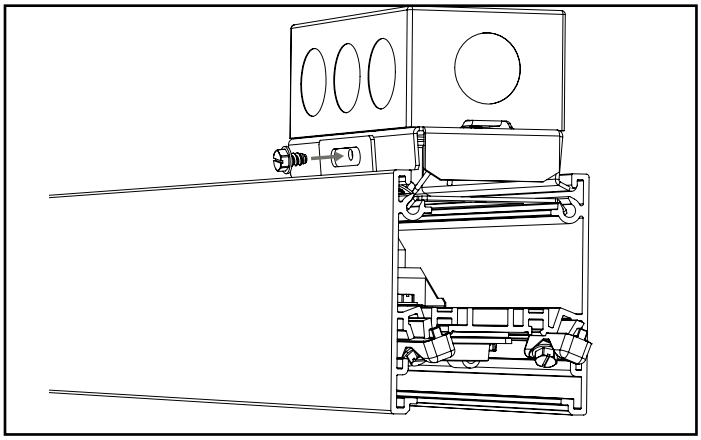

## ⑥ End Caps

Secure endcaps to fixture using cast joiners and the provided #8-18 x 1/2 HWH screws (C).

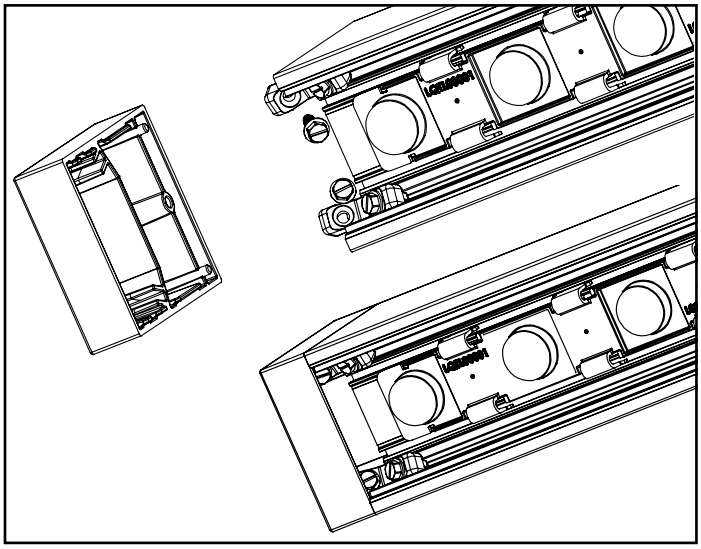

Replace all baffles by snapping in to fixture.

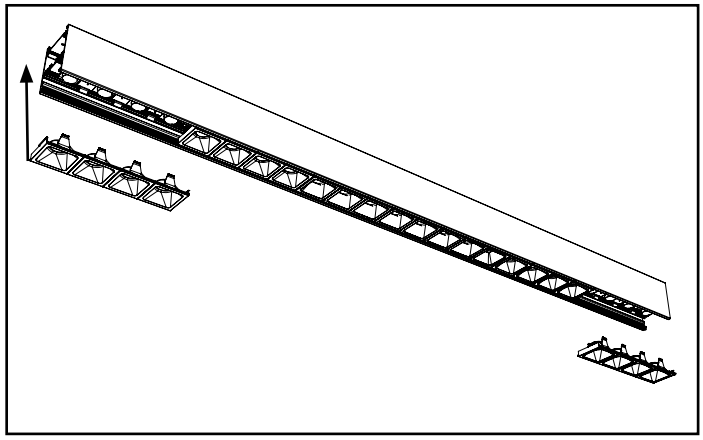

## ⑦ **Sensor End Caps** (if applicable)

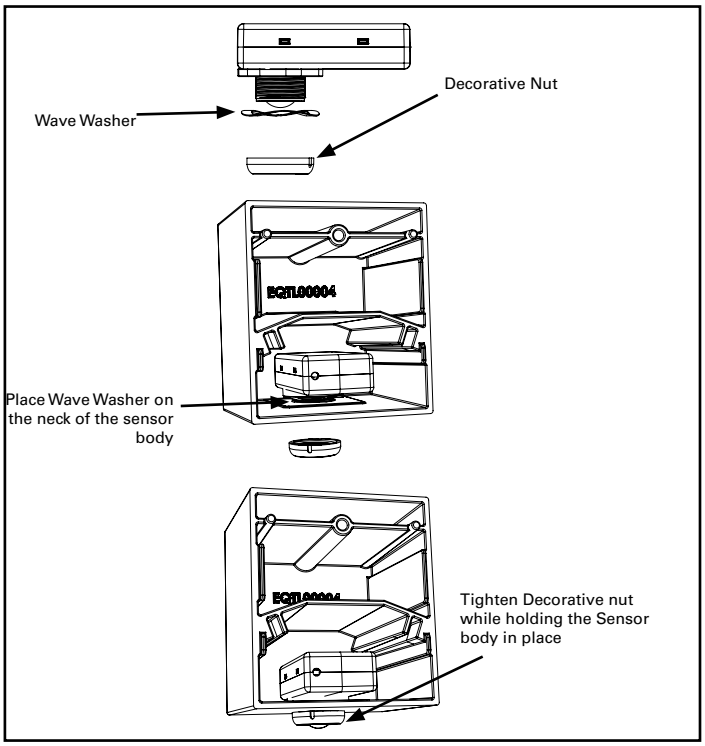


## ⑧ **Fixture Maintenance and Cleaning**

Always follow recommended cleaning and handling procedures when cleaning.

Fingerprints and large dust particles can be removed by gently wiping the surface with a clean microfiber cloth. If additional cleaning is required, it is recommended to use Clorox® wipes to remove remaining contaminants by gently rubbing the affected area and allowing to air dry.

## Warranties and Limitation of Liability

Please refer to **www.cooperlighting.com/WarrantyTerms** for our terms and conditions.

## Garanties et limitation de responsabilité

Veuillez consulter le site **www.cooperlighting.com/WarrantyTerms** pour obtenir les conditions générales.

## Garantías y Limitación de Responsabilidad

Visite **www.cooperlighting.com/WarrantyTerms** para conocer nuestros términos y condiciones.

**FCC Statement**

•This device complies with Part 15 of the FCC Rules. Operation is subject to the following two conditions:

(1) This device may not cause harmful interference.
(2) This device must accept any interference received, including
interference that may cause undesired operation.

**Note:** The grantee is not responsible for any changes or modifications not expressly approved by the party responsible for compliance. Such modifications could void the user's authority to operate the equipment.

**Note:** The equipment has been tested and found to comply with the limits for a Class B digital device, pursuant to part 15 of the FCC Rules.
These limits are designed to provide reasonable protection against harmful interference in a residential installation. This equipment generates uses and can radiate radio frequency energy and, if not installed and used in accordance with the instructions, may cause harmful interference to radio communications. However, there is no guarantee that interference will not occur in a particular installation. If this equipment does cause harmful interference to radio or television reception, which can be determined by turning the equipment off an on, the user is encouraged to try to correct the interference by one or more of the following measures:

- Reorient or relocate the receiving antenna.
- Increase the separation between the equipment and receiver.
- Connect the equipment into an outlet on a circuit different from that to which the receiver is connected.
- Consult the dealer or an experienced radio/TV technician for help.

This device complies with FCC radiation exposure limits set forth for an uncontrolled environment. This equipment must be installed and operated in accordance with provided instructions and the antenna(s) used for this transmitter must be installed to provide a separation distance of at least 20 cm from all persons.

COOPER
Lighting Solutions