IL52457322EN

Corelite

Installation Instructions -Vaulta Suspended

⚠WARNING

Risk of Fire, Electrical Shock, Cuts or other Casualty Hazards- Installation and maintenance of this product must be performed by a qualified electrician. This product must be installed in accordance with the applicable installation code by a person familiar with the construction and operation of the product and hazards involved.

Risk of Fire and Electric Shock- Make certain power is OFF before starting installation or attempting any maintenance. Disconnect power at fuse or circuit breaker.

Risk of Fire- Minimum 90°C supply conductors.

Risk of Burn- Disconnect power and allow fixture to cool before handling or servicing.

Risk of Personal Injury- Due to sharp edges, handle with care.

Risk of Personal Injury- Fixture not intended to be installed in a gymnasium or other space where impacts from objects can occur.

Failure to comply with these instructions may result in death, serious bodily injury and property damage.

DISCLAIMER OF LIABILITY: Cooper Lighting Solutions assumes no liability for damages or losses of any kind that may arise from the improper, careless, or negligent installation, handling or use of this product.

IMPORTANT: Read carefully before installing fixture. Retain for future reference.

NOTICE: Green ground screw provided in proper location. Do not relocate.

NOTICE: Fixture may become damaged and/or unstable if not installed properly.

Note: Specifications and dimensions subject to change without notice.

ATTENTION Receiving Department: Note actual fixture description of any shortage or noticeable damage on delivery receipt. File claim for common carrier (LTL) directly with carrier. Claims for concealed damage must be filed within 15 days of delivery. All damaged material, complete with original packing must be retained.

COOPER Lighting Solutions

Wiring Table

Power Supply (Input)

- Black (BK) - Hot
- White (WT) - Neutral
- Green (GN) - Ground
- Violet (VT) - Dimming (+)
- Pink (PK) - Dimming (-)

Power Supply (Input) - When Applicable

- Black/Red (BK/RD) - Emergency Hot
- White/Red (WT/RD) - Emergency Neutral
- Black/Orange (BK/OR) - 2nd Circuit Hot
- White/Orange (WT/OR) - 2nd Circuit Neutral
- Orange (OR) - 2nd Circuit Dimming (+)
- Yellow (YL) - 2nd Circuit Dimming (-)
- Blue (BL) - Battery/Emergency Unswitched Hot

Vivid Tune

- Violet/White (VT/WT) - 1st Circuit CCT (+)
- Gray/Black (GY/BK) - 1st Circuit CCT (-)
- Black/White (BK/WT) - 2nd Circuit CCT (+)
- White/Yellow - 2nd Circuit CCT (-)

Recommended Equipment:

- Hammer
- 1/4" nut driver
- Flathead screwdriver
- Scissors or sharp cutting blade
- Gloves

Optional Baffle

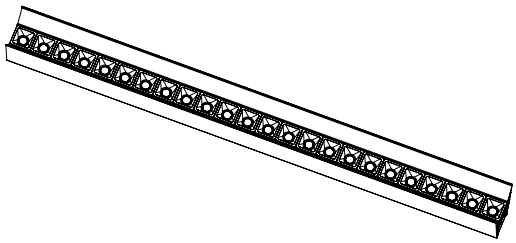

Baffles are shipped pre-installed in the light fixture.

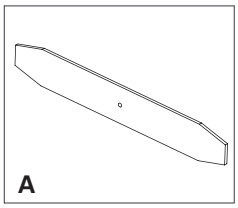

Biscuit Aligner

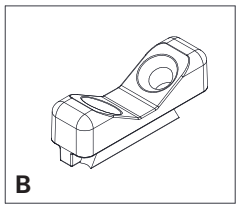

Cast joiner

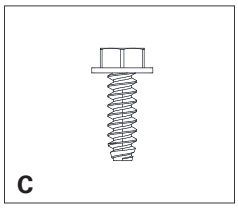

#8-18 x 1/2 HWH

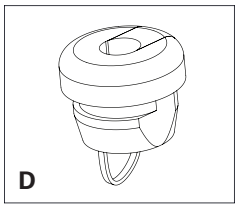

Strain Relief

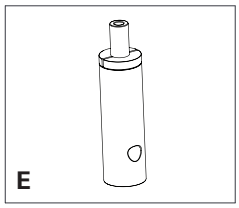

Cable Adjuster

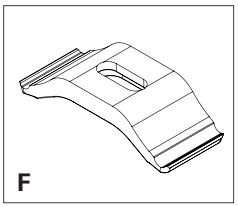

Cable Mount

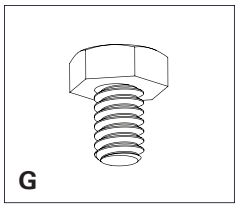

#1/4-20 x 3/8

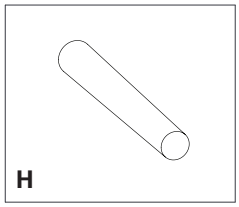

Taper Pin

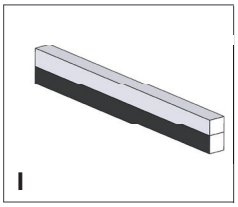

Baffle Gasket (optional)

System Overview

VAULTA Joint Kit(s)

- (x2) Biscuit Aligners (A)
- (x2) Cast joiners (B)
- (x4) #8-18 x 1/2 HWH Screws (C)
- (x2) Taper Pins (H)

NOTE: 1 kit required for each fixture-to-fixture joint

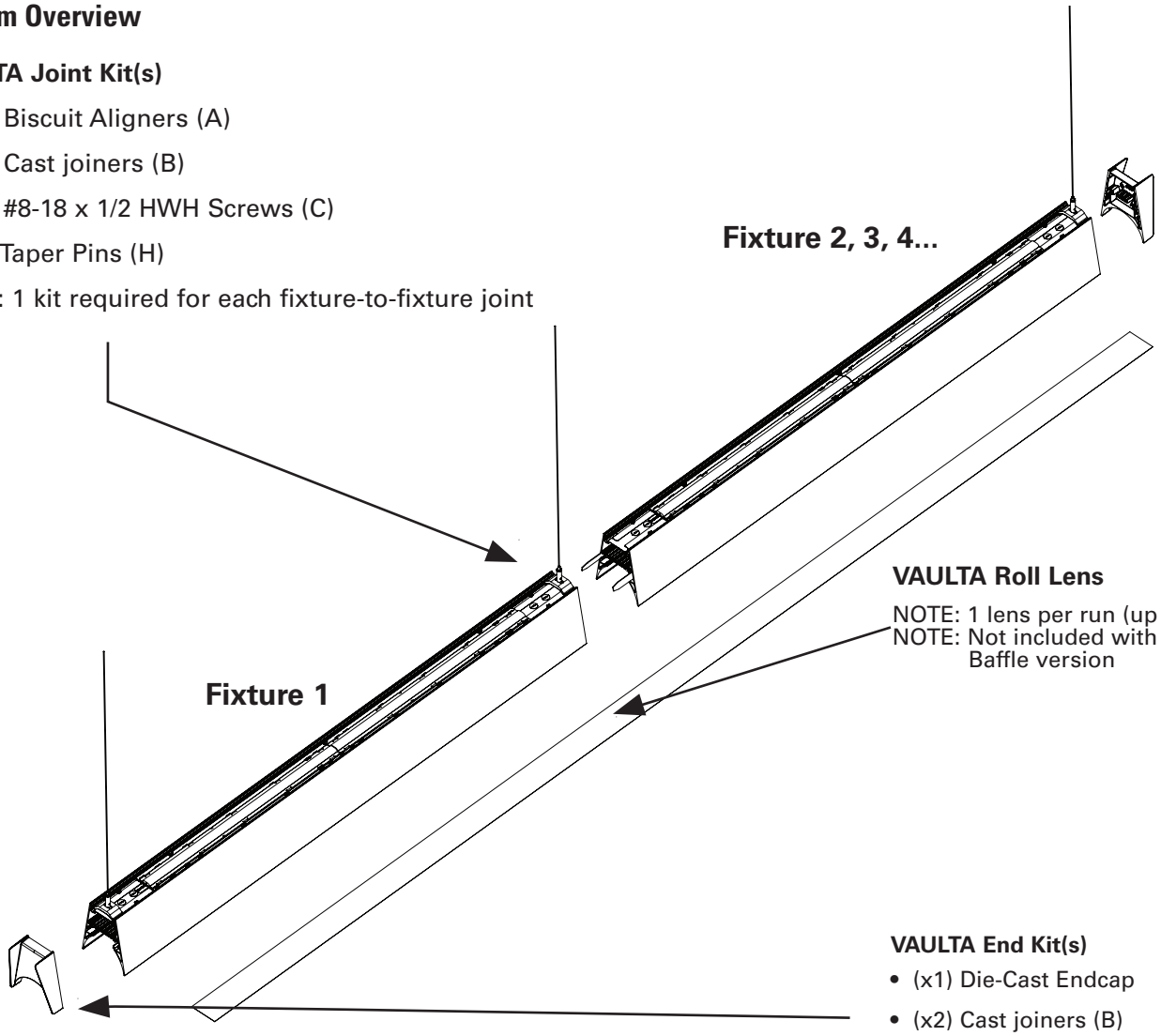

VAULTA Roll Lens

NOTE: 1 lens per run (up to 100')
NOTE: Not included with Baffle version

VAULTA End Kit(s)

- (x1) Die-Cast Endcap
- (x2) Cast joiners (B)
- (x4) #8-18 x 1/2 HWH Screws (C)

NOTE: 2 kits required for each run (one for each end)

Mount Spacing

Maximum distance of flexible mount location from end of unit: 1' for 4' unit, 1' for 6' unit, 2' for 8' unit 4' for 12' unit. Maximum distance between mounting points shall not exceed 12 feet.

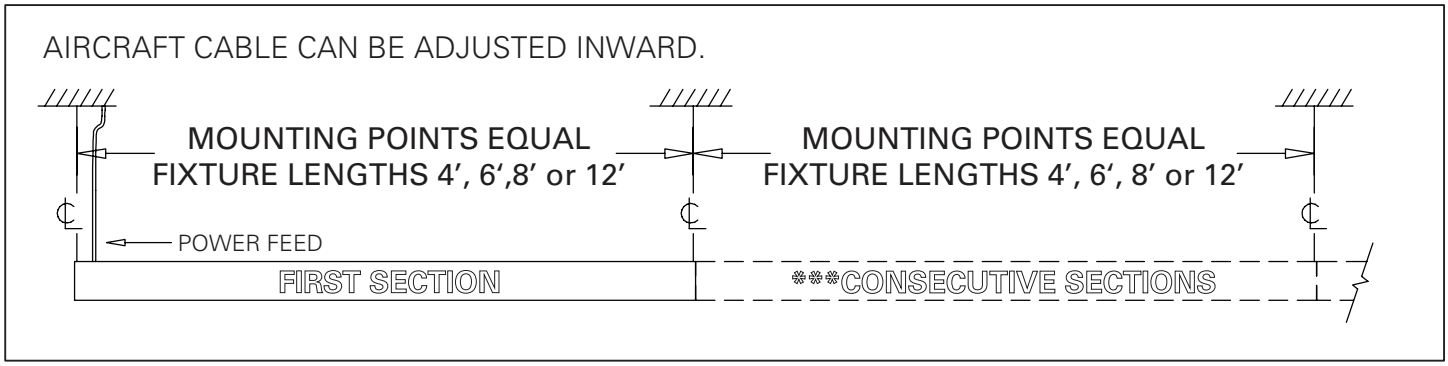

For installation at ceiling, see separate ceiling interface instructions.

① Joining Hardware - Used to Join Fixtures Together - Not Used for Individual Fixtures

Remove electrical wiring access plates at both ends of the fixture. Push **Biscuit Aligners (A)** into housing as shown. Install large end of **taper pins (H)** in housing as shown. Use a hammer to seat the biscuits and pins if required. Slide **cast joiners (B)** half way into the housing and fasten with the provided screws **(C)**.

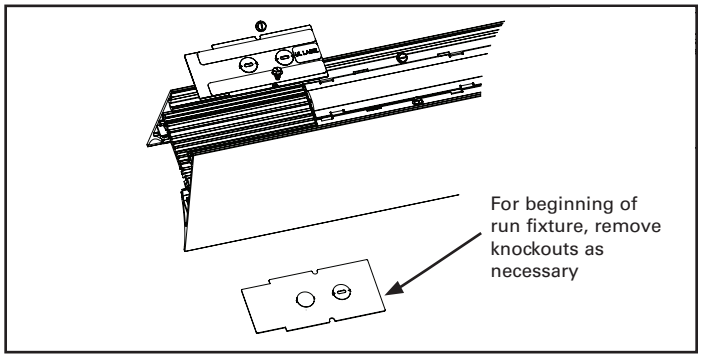

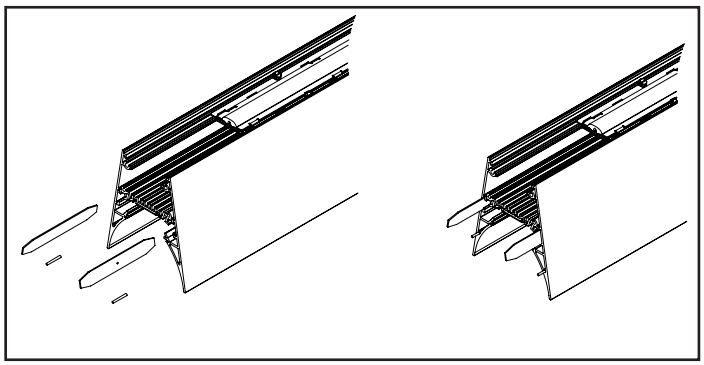

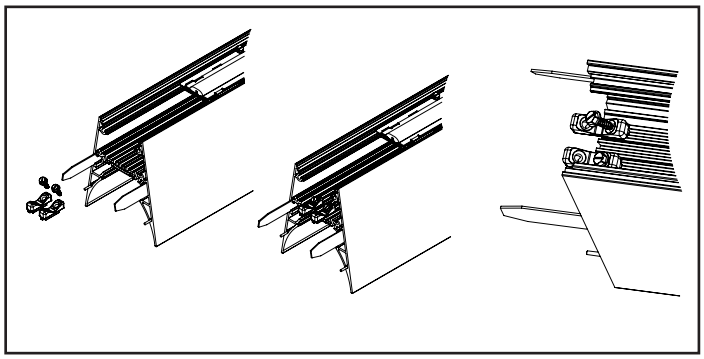

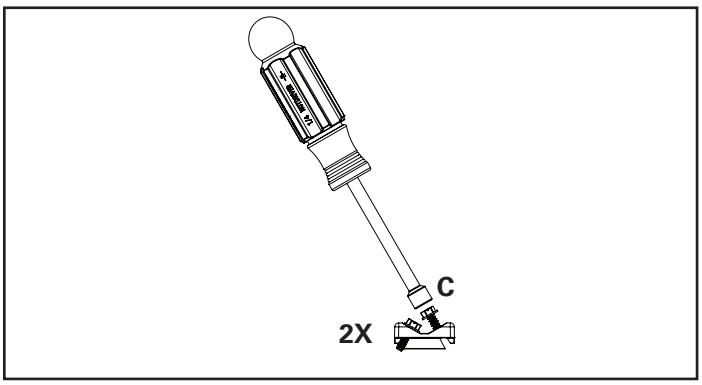

② Aircraft Cable Mounting

Assemble the aircraft cable suspension bracket as shown below. Slide the assembly into the housing and temporarily insert one of the electrical access plate screws into the housing (as shown below) to prevent the assembly from sliding.

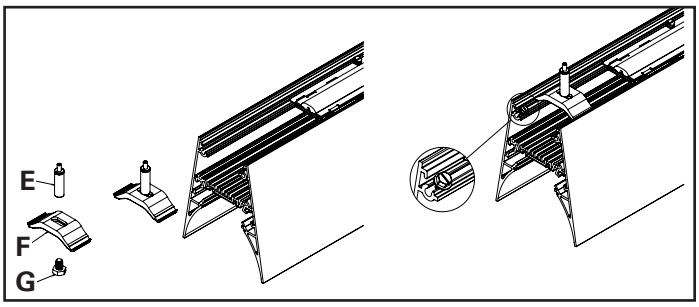

The end cap can be attached to the fixture using **cast joiners (B)** and the provided **#8-18 x 1/2 HWH screws(C)**

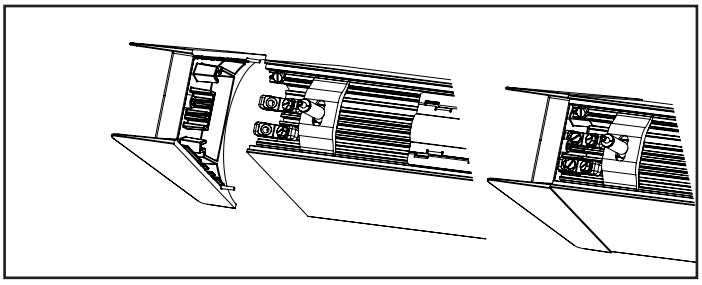

The fixture can now be suspended from the supplied aircraft cable.

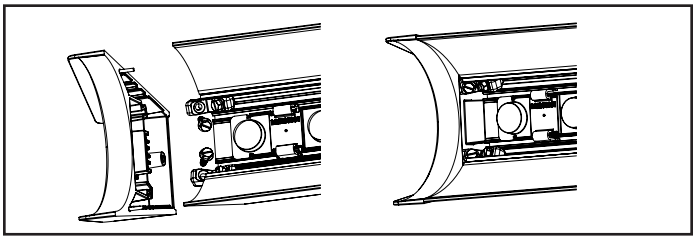

Optional - For baffle fixtures only - the end cap can be attached from below.

③ Power Drop

Wire fixture following the wiring chart shown on page 2. Once wiring is completed, re-attach the electrical access plate. Install **strain relief (D)** as shown.

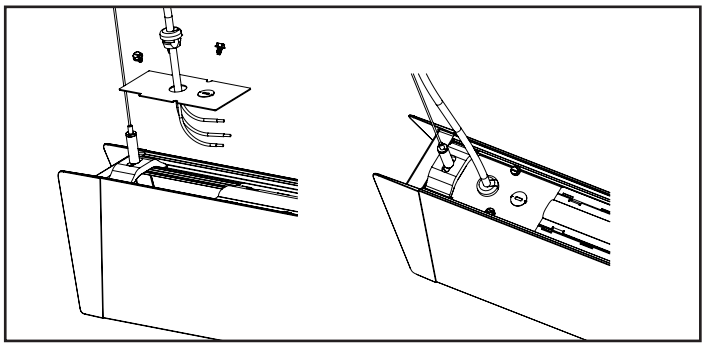

④ Joining

Slide next fixture onto the hanging fixture until the **biscuit aligners (A)** and **taper pins (H)** engage. Ensure the biscuits remain approximately centered between the fixtures during joining. Once fixtures are together fasten **cast joiners (B)** using the provided **#8-18 x 1/2 HWH screws(C)**. Make wiring connections and push wires into the housing. Then re-attach the electrical access plates.

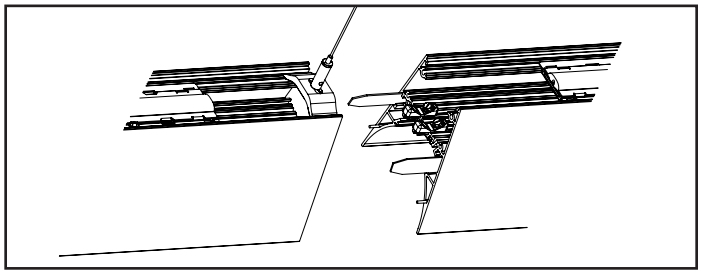

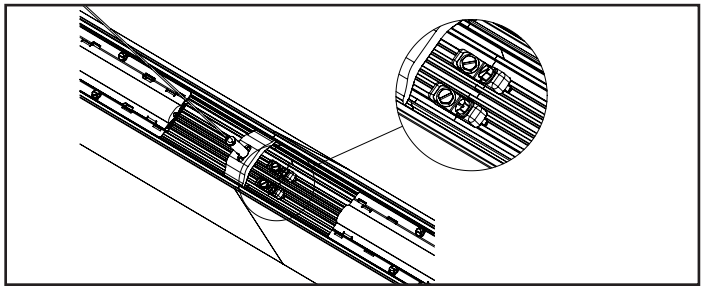

Optional: Cast Joiners (B) can be installed from below.

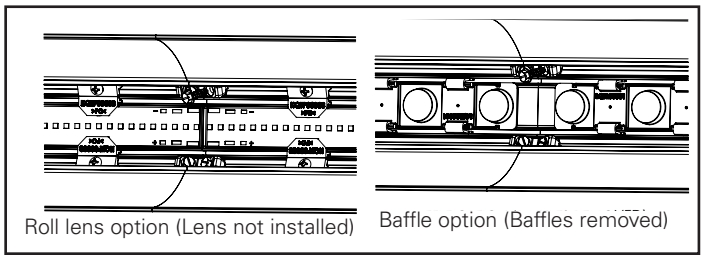

Roll lens option (Lens not installed) Baffle option (Baffles removed)

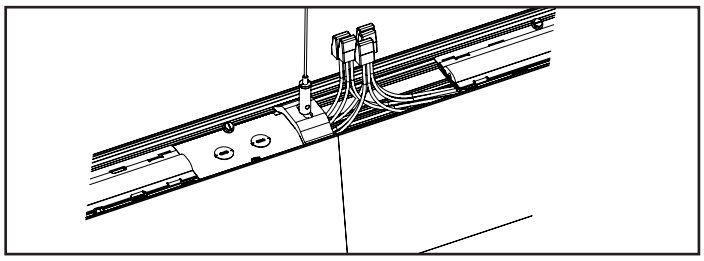

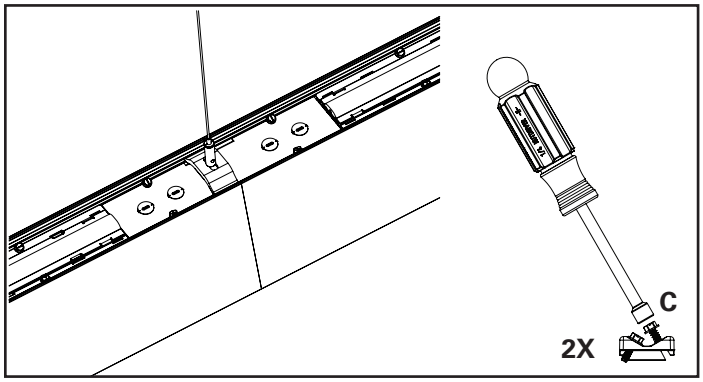

⑤ Roll Lens

IMPORTANT: If conditions are dusty/dirty, recommended practice is to keep lens roll(s) in plastic packaging and install once conditions are clean. Install roll lens using clean work gloves.

IMPORTANT: Energize fixture to test LEDs and confirm they are all lit before beginning Roll Lens install.

Support the roll lens at one end of fixture (as shown) while another person pulls lens through.

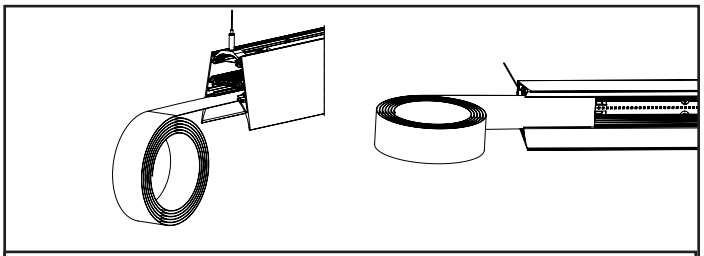

Light Shaping Lens Option

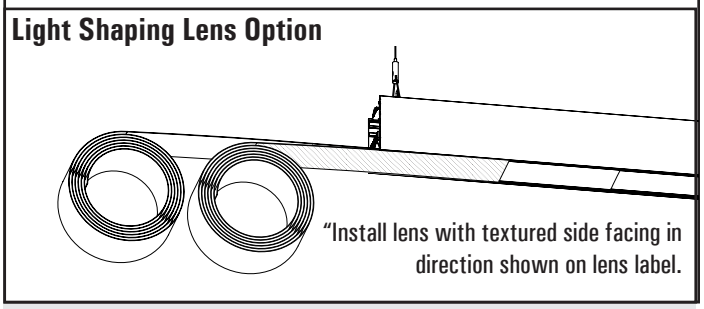

IMPORTANT: Ends of lenses should overhang fixture by ¼" at each end. Trim lens where necessary. **DO NOT UNDER-CUT.**

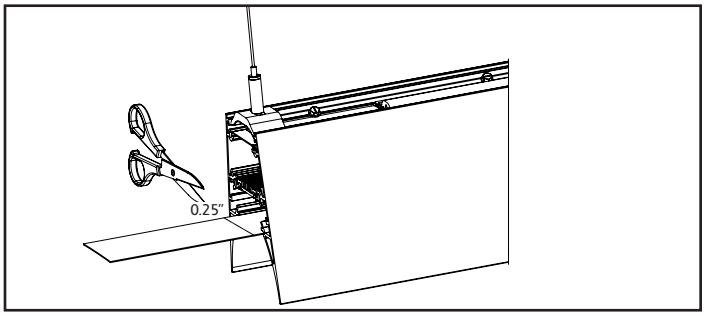

⑥ Optional Baffles

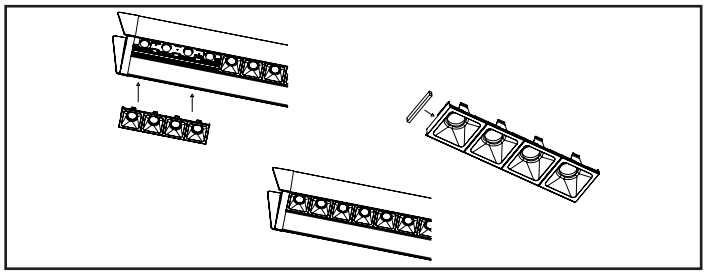

If required, use provided gaskets to ensure there is no light leak between each baffle section. (The bottom color of the gasket should match the color of the baffle). The baffles snap in and out of the fixture.

⑦ **Sensor End Caps** (if applicable)

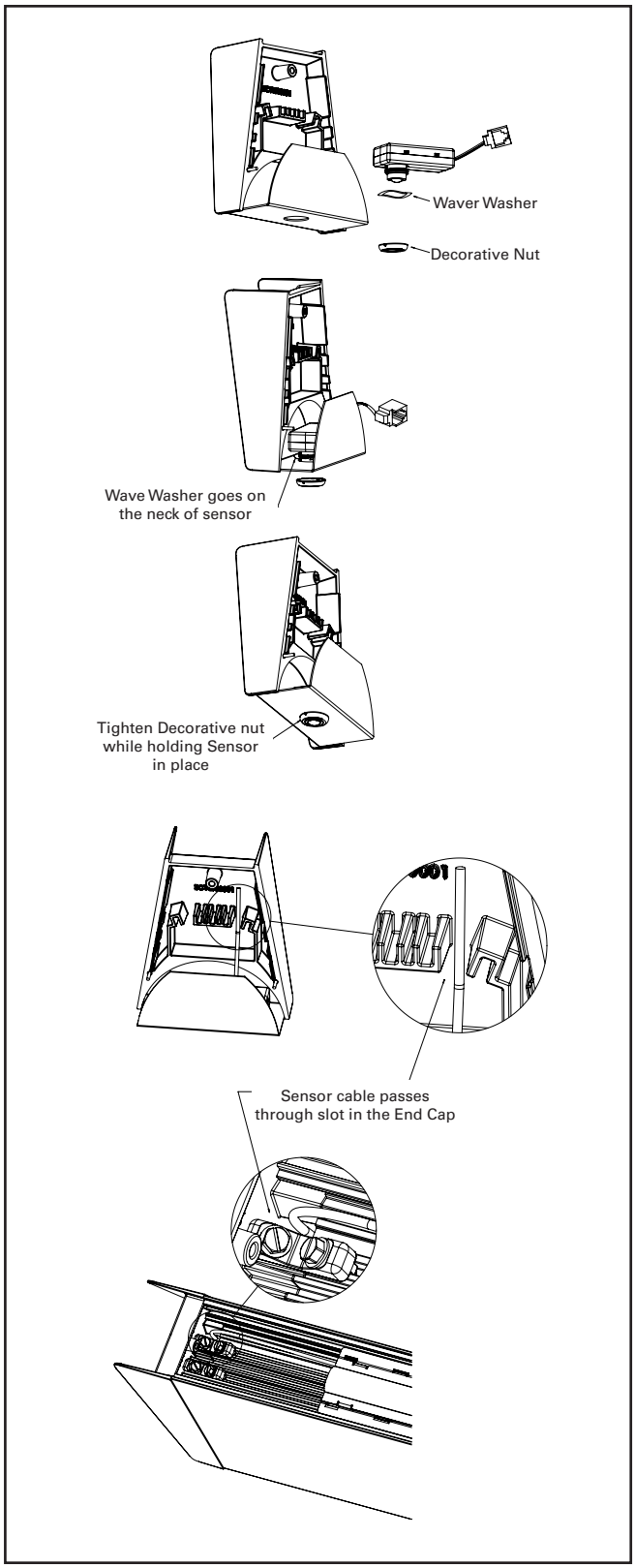

⑧ **Sensor Side Mount** (if applicable)

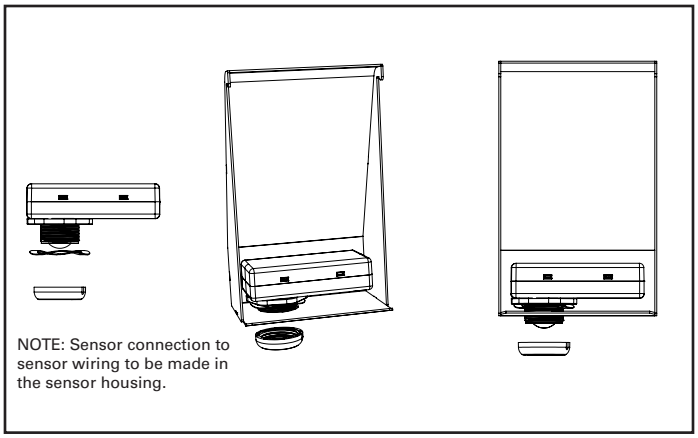

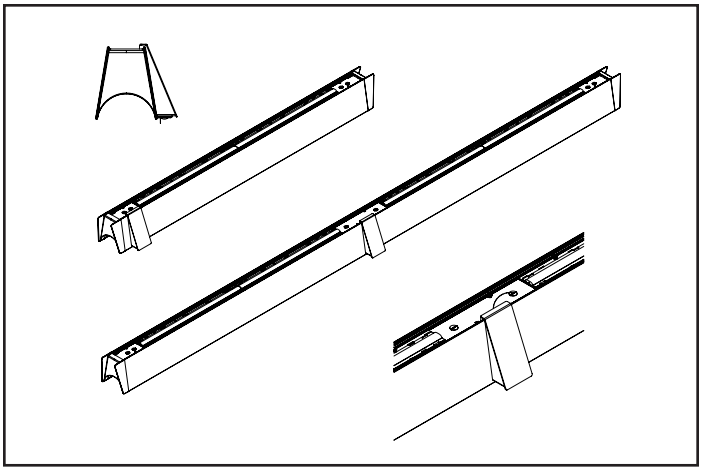

⑨ Fixture Maintenance and Cleaning

Always follow recommended cleaning and handling procedures when cleaning the lens. It can be permanently damaged if cleaned or handled improperly.

Blowing off the Surface of the Lens

Dust and other loose contaminants should be blown off before any other cleaning technique is employed. Using compressed air over the entire lens is recommended to prevent static buildup.

Additional Cleaning Methods

Fingerprints and large dust particles can be removed by gently wiping the surface with a clean microfiber cloth. If additional cleaning is required it is recommended to use Clorox® wipes to remove remaining contaminants by gently rubbing the affected area and allowing to air dry.

Warranties and Limitation of Liability

Please refer to **www.cooperlighting.com/WarrantyTerms** for our terms and conditions.

Garanties et limitation de responsabilité

Veuillez consulter le site **www.cooperlighting.com/WarrantyTerms** pour obtenir les conditions générales.

Garantías y Limitación de Responsabilidad

Visite **www.cooperlighting.com/WarrantyTerms** para conocer nuestros términos y condiciones.

FCC Statement

•This device complies with Part 15 of the FCC Rules. Operation is subject to the following two conditions:

(1) This device may not cause harmful interference.
(2) This device must accept any interference received, including
interference that may cause undesired operation.

Note: The grantee is not responsible for any changes or modifications not expressly approved by the party responsible for compliance. Such modifications could void the user's authority to operate the equipment.

Note: The equipment has been tested and found to comply with the limits for a Class B digital device, pursuant to part 15 of the FCC Rules.
These limits are designed to provide reasonable protection against harmful interference in a residential installation. This equipment generates uses and can radiate radio frequency energy and, if not installed and used in accordance with the instructions, may cause harmful interference to radio communications. However, there is no guarantee that interference will not occur in a particular installation. If this equipment does cause harmful interference to radio or television reception, which can be determined by turning the equipment off an on, the user is encouraged to try to correct the interference by one or more of the following measures:

- Reorient or relocate the receiving antenna.
- Increase the separation between the equipment and receiver.
- Connect the equipment into an outlet on a circuit different from that to which the receiver is connected.
- Consult the dealer or an experienced radio/TV technician for help.

This device complies with FCC radiation exposure limits set forth for an uncontrolled environment. This equipment must be installed and operated in accordance with provided instructions and the antenna(s) used for this transmitter must be installed to provide a separation distance of at least 20 cm from all persons.

COOPER
Lighting Solutions