Project		Catalog #		Type	
Prepared by		Notes		Date	

HALO

RL6 Slope Ceiling | Direct Mount

6” Slope Ceiling LED Direct Mount Module
1500 Lumen Series

Typical Applications

Residential

Interactive Menu

- Order Information page 2
- Product Specifications page 2
- Energy Data page 3
- Photometric Data page 3
- Product Warranty

Product Certification

Refer to ENERGY STAR® Certified Products List.
Can be used to comply with California Title 24 High Efficacy requirements.
Certified to California Appliance Efficiency Database under JA8.

Product Features

Top Product Features

- Adjusts from 9° to 45° to match virtually any ceiling pitch
- Select from 5 CCTs via switch: 2700K, 3000K, 3500K, 4000K, 5000K
- Canless installation, no housing required
- 120V input, phase cut dimming to 5%
- Perfect for new construction or remodel work

Dimensional and Mounting Details

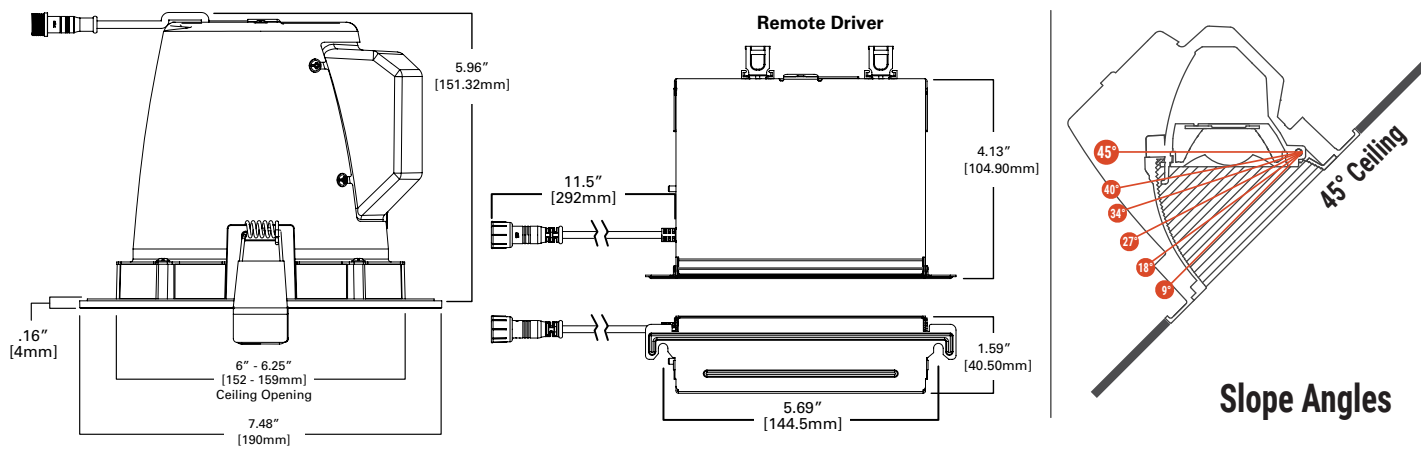

Order Information

SAMPLE ORDER NUMBER: **RLS6159FS1EWHDMR**

A complete luminaire consists of an LED module and remote driver/junction box.

Models	Lumens	CRI/CCT	Driver	Finish	Mounting	Packaging
RLS6 = 6" RL Slope Ceiling direct mount module	**15** = 1500 lumen series (nominal)	**9FS** = 90 CRI min, 5-color selectable CCT	**1E** = 120V 60Hz, LE & TE phase cut 5% dimming	**WH =** Matte white baffle	**DM =** Direct Mount	**R** = recyclable 4-color unit carton
Notes	**Notes**	**Notes**	**Notes**	**Notes**	**Notes**	**Notes**

Accessories
Mounting Frame **HL6RSMF** = 6" round and square new construction mounting frame **Extension Cable | seleCCTable Driver/Jbox** **HLB06FSEC** – 6 ft. extension cable **HLB12FSEC** – 12 ft. extension cable **HLB20FSEC** – 20 ft. extension cable

Product Specifications

Module
- LED module consists of LED (chip on board), optical assembly, driver and self-flanged trim
- Regressed baffle style trim
- Achieving L70 at 50,000 hours in IC and non-IC applications
- Adjustment mechanism tilts the light engine from 9° up to 45° to match 2/12 to 12/12 ceiling pitches

Gaskets
- Closed cell gasket achieves restrictive airflow requirements without additional caulking

LED
- Chip on board LEDs provide a uniform source with high efficiency and no pixilation
- Available in 90 CRI minimum, R9 greater than 50 and color accuracy within 4 SDCM provide color accuracy and uniformity
- Available in 5-color field selectable CCT: 2700K, 3000K, 3500K, 4000K, 5000K

Optical Assembly
- Optical assembly provides flood distribution useful for general and task lighting in sloped ceiling applications
- Diffuse injection molded lens with contoured profile provides uniformity and a familiar lamp like appearance
- Meets ENERGY STAR® color angular uniformity requirements

Junction Box
- Die formed metal driver / junction box with captive hinged junction box cover
- Listed for (6) #12 AWG 90˚ C splice conductors, 2-in, 2-out plus (2) ground
- (3) ½" conduit pry-outs
- (2) Slide-N-Side™ non-metallic (NM) wire traps accept 14-2, 14-3, 12-2, 12-3 U.S. and 14-2, 14-3, 12-2 Canadian NM cable
- (3) 4-port push wire nuts for quick and reliable mains voltage connections
- Integral mounting facilitates direct mounting to building structure or mounting frame

Driver
- Remote 120V 60 Hz constant current driver provides high efficiency operation
- Continuous, flicker-free dimming from 100% to 5% with select leading or trailing edge 120V phase cut dimmers – consult dimming guide for more information
- Consult dimmer manufacturer for compatibility and conditions of use

Installation
- Can be installed in 1/2" to 1-1/4" thick ceilings
- Round ceiling cutout
- Heat treated springs hold fixture fitting securely in the ceiling eliminating light leaks
- Can be removed from below the ceiling for service or replacement

Compliance
- UL Certified for US and Canada, type IC suitable for direct contact with air permeable insulation
- Not for use in direct contact with spray foam insulation, reference NEMA LSD57-2013
- Damp location listed
- Air-tite per ASTM-E283
- Suitable for use in clothes closets when installed in accordance with the NEC 410.16 spacing requirements
- EMI/RFI emissions per FCC 47CFR Part 15 consumer limits
- Contains no mercury or lead and is RoHS compliant
- Photometric testing in accordance with IES LM79-08
- Lumen maintenance projections in accordance with IES LM-80-08 and TM-21-11
- Compliant with California Title 24 High Efficiency LED under JA8, reference Modernized Appliance Efficiency Database System (MAEDBS) for 2019 JA8 High Efficacy Lighting
- ENERGY STAR® certified, reference "Certified Light Fixtures" database

Warranty
- Five year limited warranty, consult website for details. www.cooperlighting.com/legal

Photometric Data

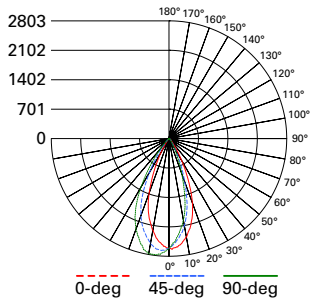

RLS6159FS1EWHDM-3000K

Spacing criterion: (0-180) 1.19
(90-270) 1.19
(Diagonal) 1.28

Beam Angle: 45°
Field Angle: 70°
Lumens: 1630
Input Watts: 19 W
Efficacy: 85.8 LPW
Test Report:
RLS6159FS1EWHDM 3000K.ies

Zonal Lumen	Lumens	% Lumens
0-30	1271	78
0-40	1492	91.5
0-60	1603	98.3
0-90	1625	99.7

TM-30-15	Rf = 93
	Rg = 99
CRI/CIE	Ra = 96
	R9 = 71

CCT - Range of 2700K- 5000K

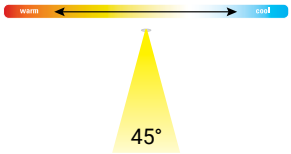

Energy Data

Energy Data @ 3000K	
Lumens	1500 Series
Input Voltage	120V
Input Current	157.7 (mA)
Input Power	19.0 (W)
Efficiency	85.8 (LPW)
Inrush (A)	3.3 (A)
THD: ≤ 20%	
PF: ≥ 0.90	
T Ambient -30 - +40°C	
Sound Rating ≤ 22dBA	

RLS6-DM	CCT	Lumens	Power (W)	LPW
Field Selectable CCT	2700K	1588	19.0	83.6
	3000K	1630	19.0	85.8
	3500K	1670	19.0	87.9
	4000K	1705	19.0	89.7
	5000K	1745	19.1	91.4

Product Specifications

RLS6099FS1EWHDMR

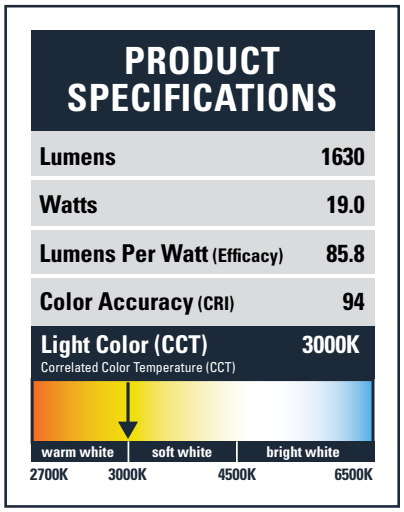

Cooper Lighting Solutions
1121 Highway 74 South
Peachtree City, GA 30269
P: 770-486-4800
www.cooperlighting.com

© 2021 Cooper Lighting Solutions
All Rights Reserved.

Specifications and dimensions
subject to change without notice.